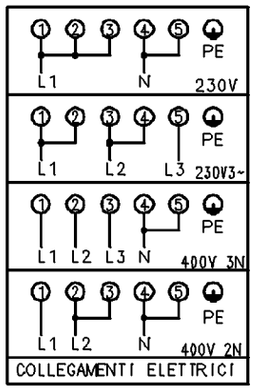
PE
L1
N
230V
L2
L3
230V3~
400V 3N
400V 2N
COLLEGAMENTI ELETTRICI

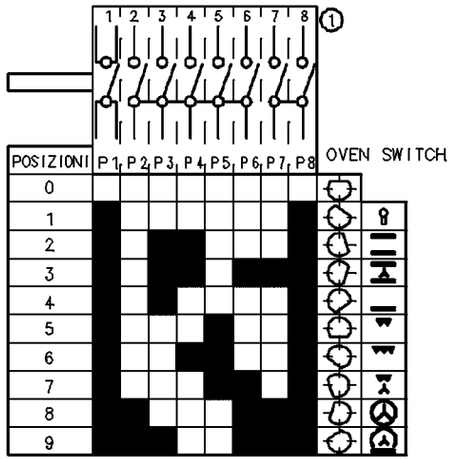
POSIZIONI
P1 P2 P3 P4 P5 P6 P7 P8
OVEN SWITCH

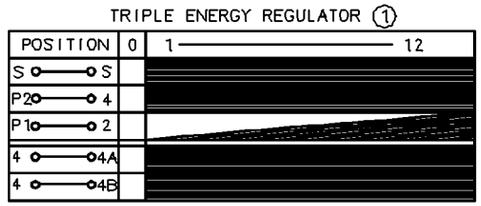
TRIPLE ENERGY REGULATOR
POSITION
0
1
12

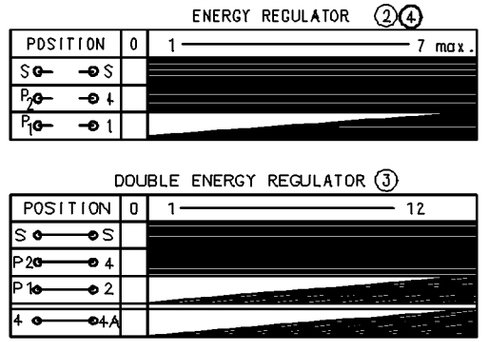
ENERGY REGULATOR
POSITION
0
1
7 max.
DOUBLE ENERGY REGULATOR
POSITION
0
1
12

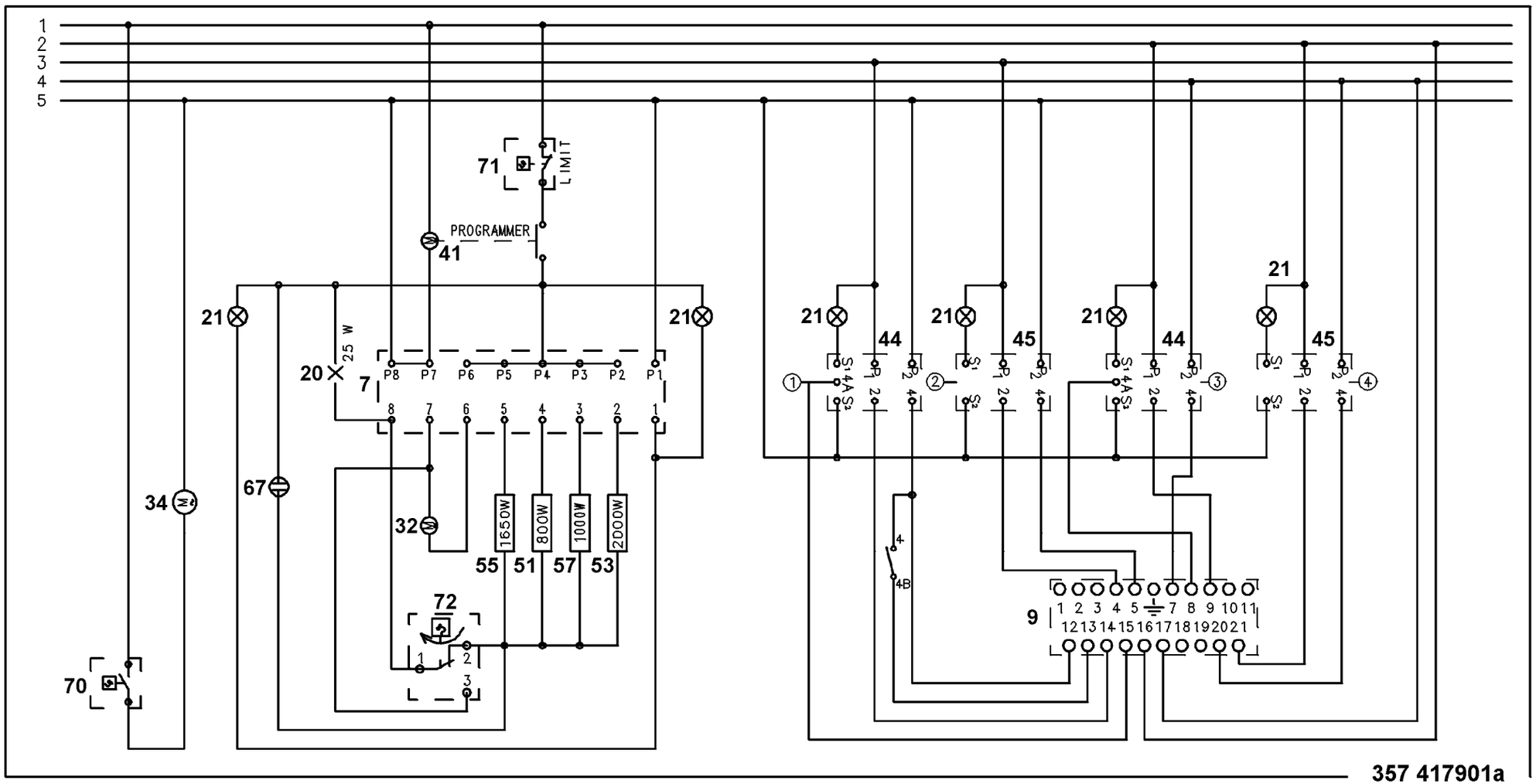
LIMIT
PROGRAMMER
25 W
1650W
800W
1000W
2000W

357 417901a