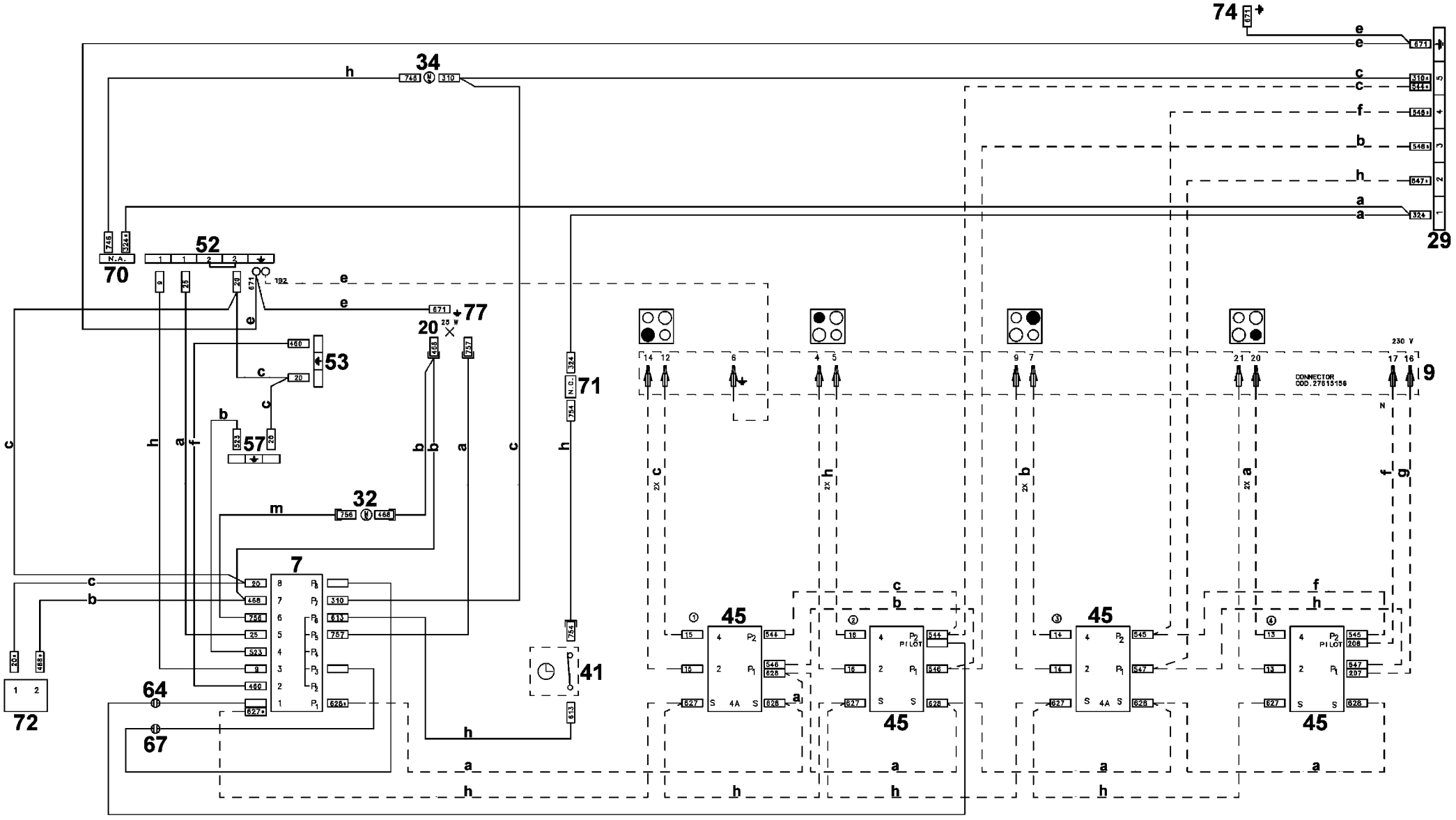
74
34
29
52
70
N.A.
77
20
53
57
32
7
71
41
64
67
72
45
45
45
45
9
CONNECTOR
COD.27615156
230 V
PILOT
PILOT

357 770202b