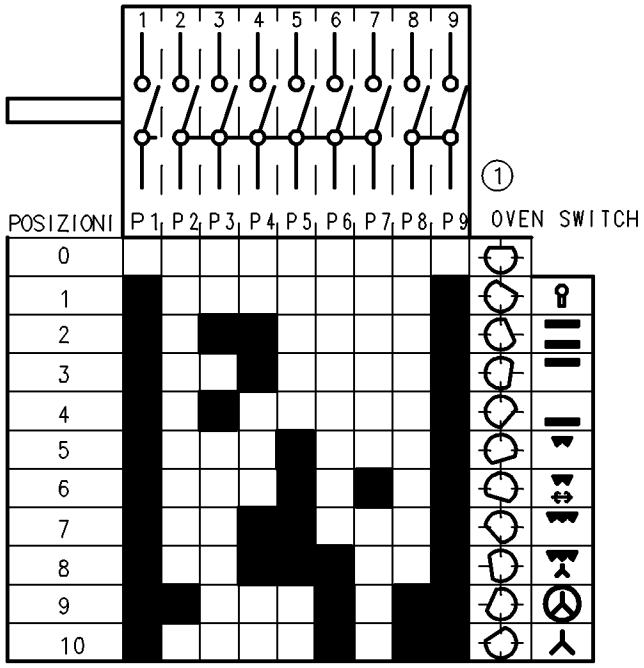
1 2 3 4 5 6 7 8 9
POSIZIONI P1 P2 P3 P4 P5 P6 P7 P8 P9
OVEN SWITCH
0
1
2
3
4
5
6
7
8
9
10

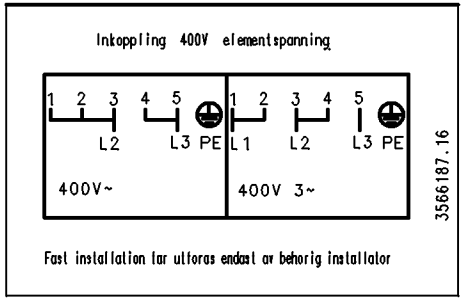
Inkoppling 400V elementspänning
1 2 3 4 5
L2 L3 PE
400V~
1 2 3 4 5
L1 L2 L3 PE
400V 3~
3566187.16
Fast installation får utföras endast av behörig installatör

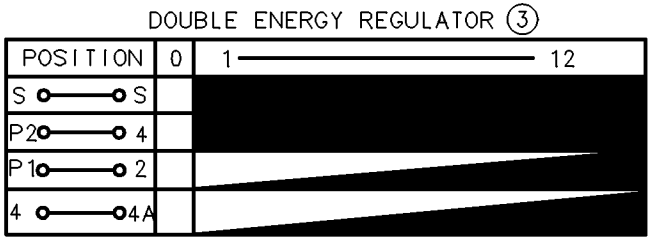
DOUBLE ENERGY REGULATOR ③
POSITION
0
1
12
S S
P2 4
P1 2
4 4A

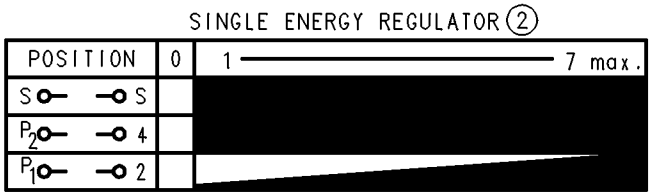
SINGLE ENERGY REGULATOR ②
POSITION
0
1
7 max.
S S
P2 4
P1 2

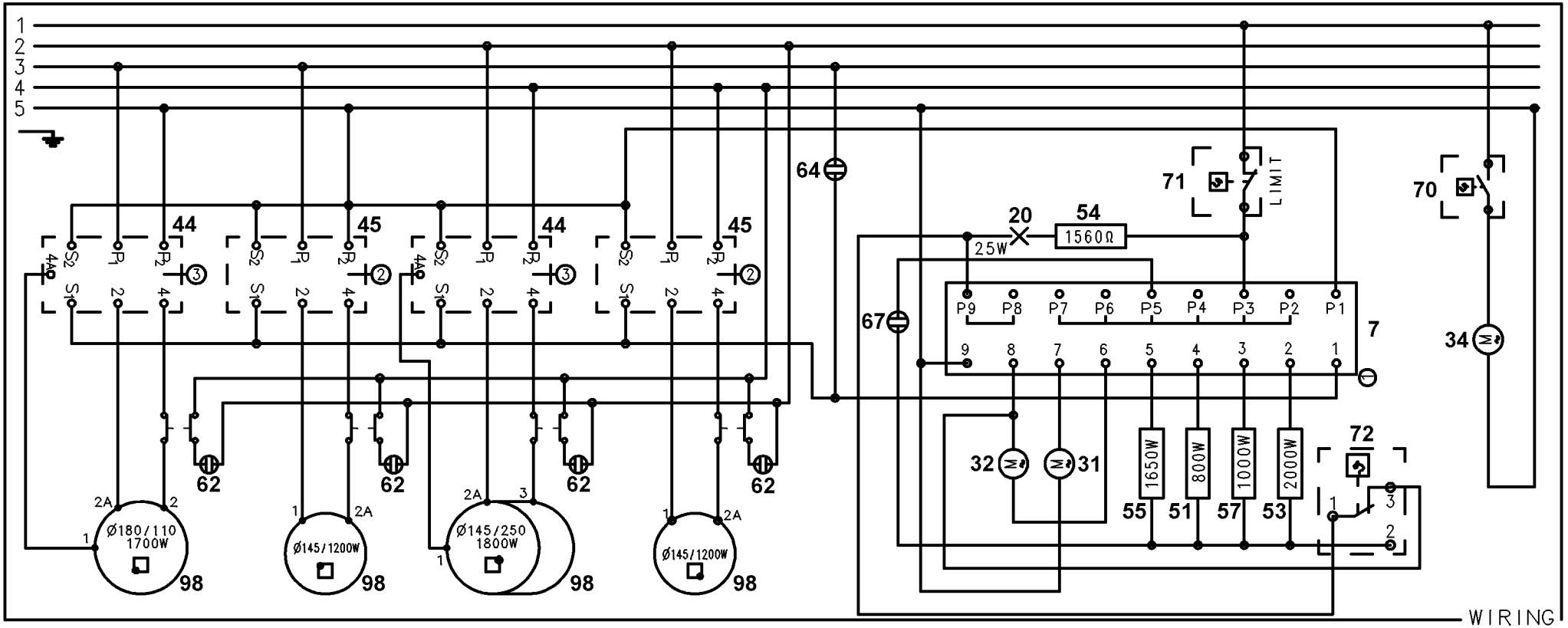
1
2
3
4
5
44
45
44
45
62
62
62
62
64
67
71
LIMIT
70
20
25W
54
1560Ω
P9 P8 P7 P6 P5 P4 P3 P2 P1
7
34
32
31
1650W
800W
1000W
2000W
55
51
57
53
72
Ø180/110
1700W
98
Ø145/1200W
98
Ø145/250
1800W
98
Ø145/1200W
98
WIRING

357 625003a