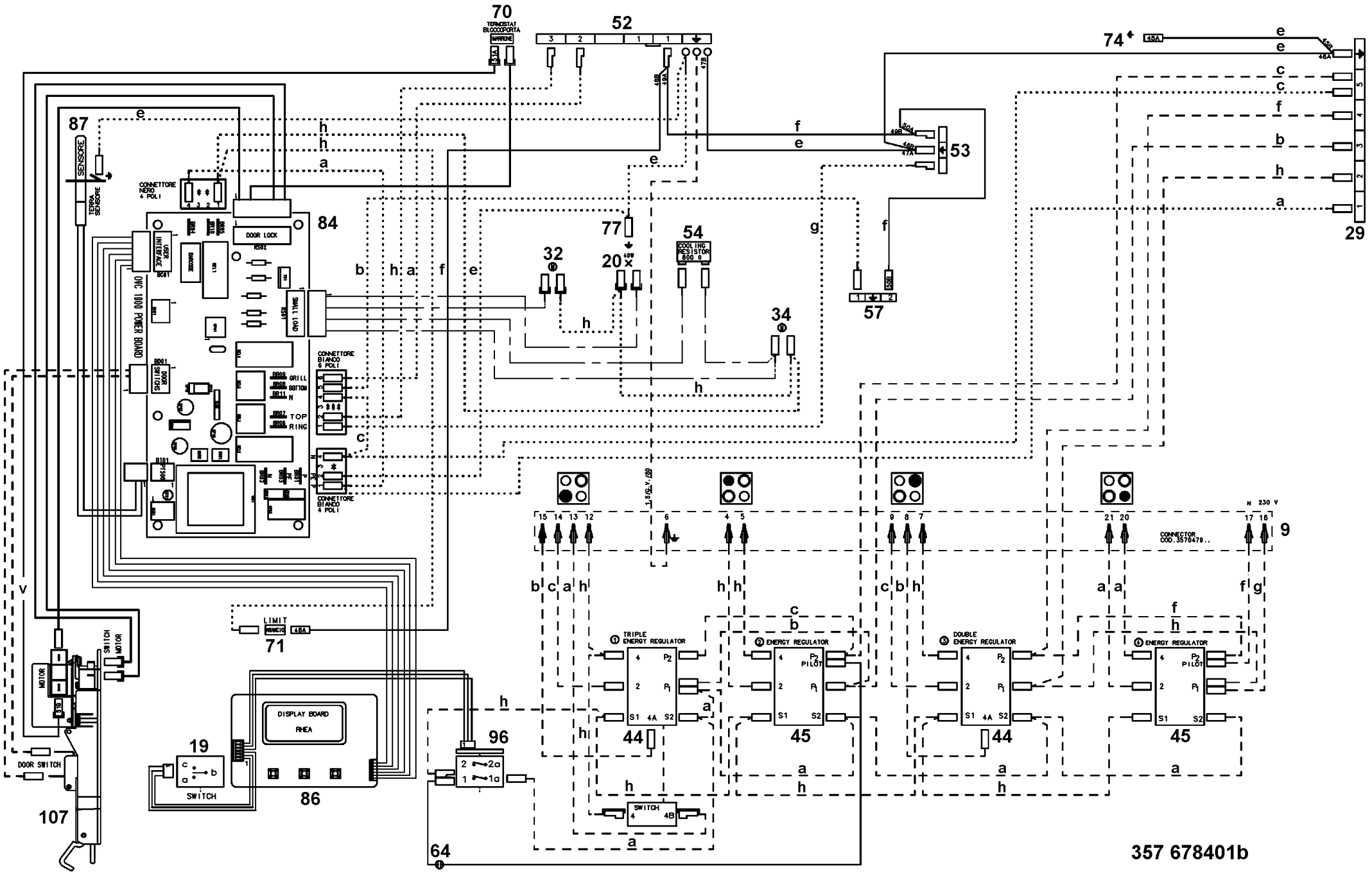
70
TERMOSTAT BLOCCOPORTA
MARRONE
52
74
45A
48A
29
87
SENSORE
TERRA SENSORE
CONNETTORE NERO 4 POLI
84
DOOR LOCK
R501
INTERFACE USER
BC01
SMALL LOAD
R501
ONC 1000 POWER BOARD
R001
POWER SWITCHS
CONNETTORE BIANCO 6 POLI
GRILL
BOTTOM
N
TOP
RING
CONNETTORE BIANCO 4 POLI
77
32
20
54
COOLING RESISTOR 800 Ω
34
57
53
47A
49B
49A
47B
50A
50B
LIMIT
MARRONE
48A
71
SWITCH
MOTOR
DOOR SWITCH
107
19
SWITCH
DISPLAY BOARD
RHEA
86
96
64
1,5/G-Y/80
15 14 13 12
6
4 5
9 8 7
21 20
17 18
N 230 V
CONNECTOR COD.3570479..
9
TRIPLE ENERGY REGULATOR
ENERGY REGULATOR
DOUBLE ENERGY REGULATOR
ENERGY REGULATOR
PILOT
44
45
44
45
SWITCH
357 678401b