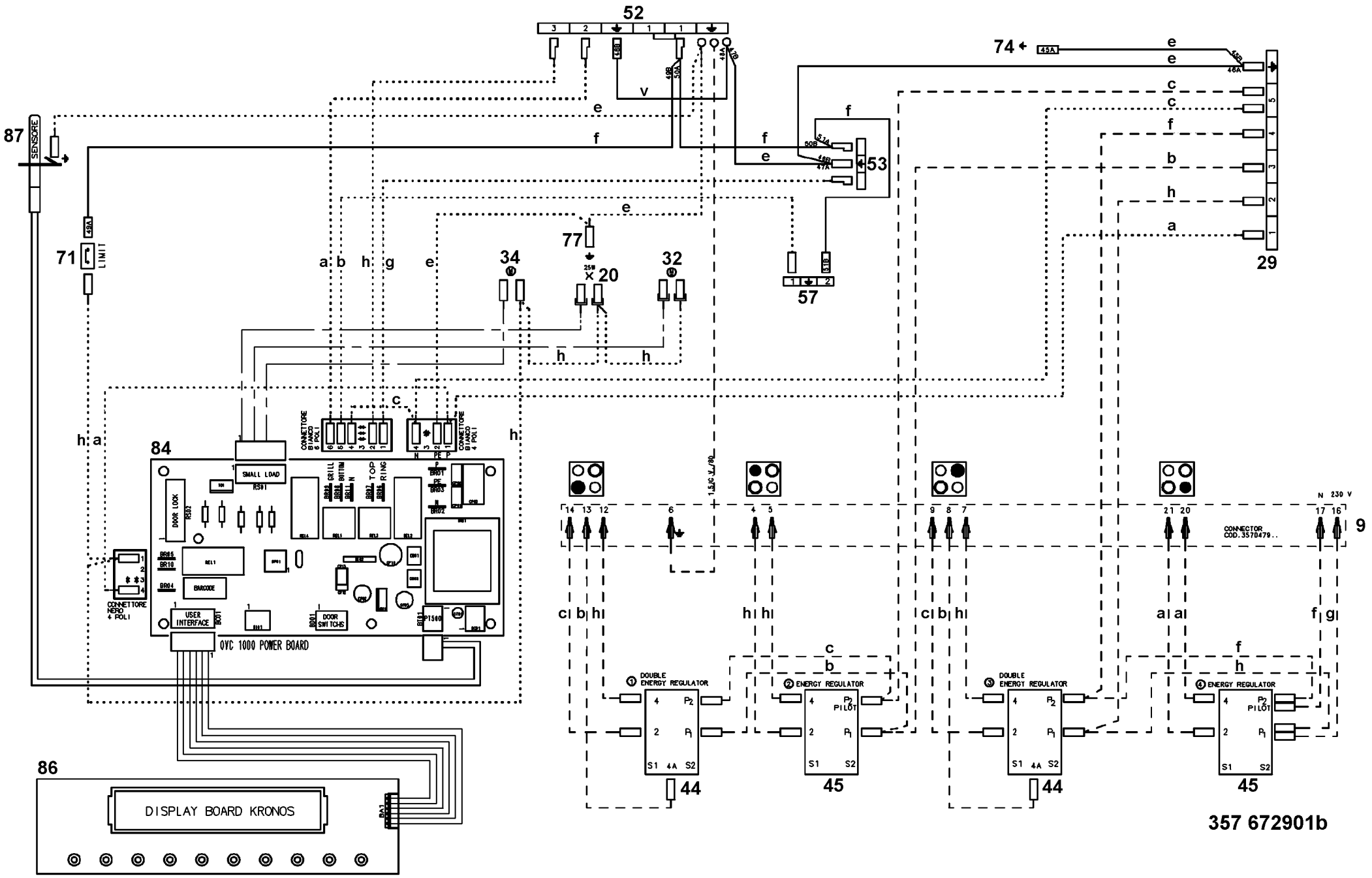
52
74
45A
87
SENSORE
71
LIMIT
77
34
20
32
57
53
29
84
SMALL LOAD
DOOR LOCK
BARCODE
USER INTERFACE
DOOR SWITCHS
CONNETTORE BIANCO 6 POLI
CONNETTORE BIANCO 4 POLI
CONNETTORE NERO 4 POLI
GRILL BOTTOM
TOP RING
OVC 1000 POWER BOARD
86
DISPLAY BOARD KRONOS
9
CONNECTOR COD.3570479..
N 230 V
DOUBLE ENERGY REGULATOR
ENERGY REGULATOR
PILOT
44
45
357 672901b