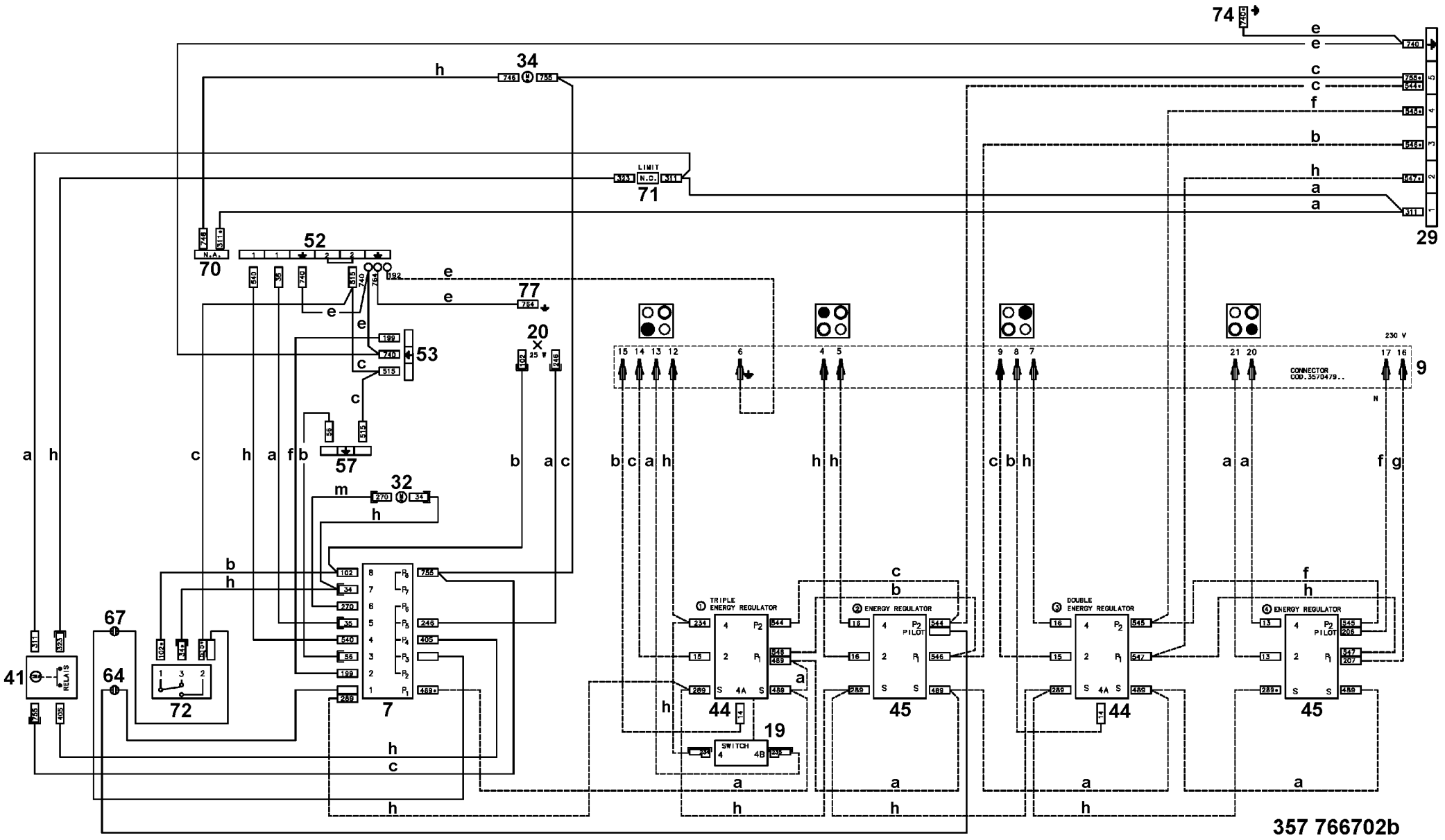
74
34
LIMIT
N.C.
71
29
52
70
77
20
53
57
32
9
CONNECTOR
COD.3570479..
230 V
TRIPLE
ENERGY REGULATOR
ENERGY REGULATOR
DOUBLE
ENERGY REGULATOR
ENERGY REGULATOR
PILOT
44
45
44
45
19
SWITCH
7
41
RELAIS
67
64
72
357 766702b