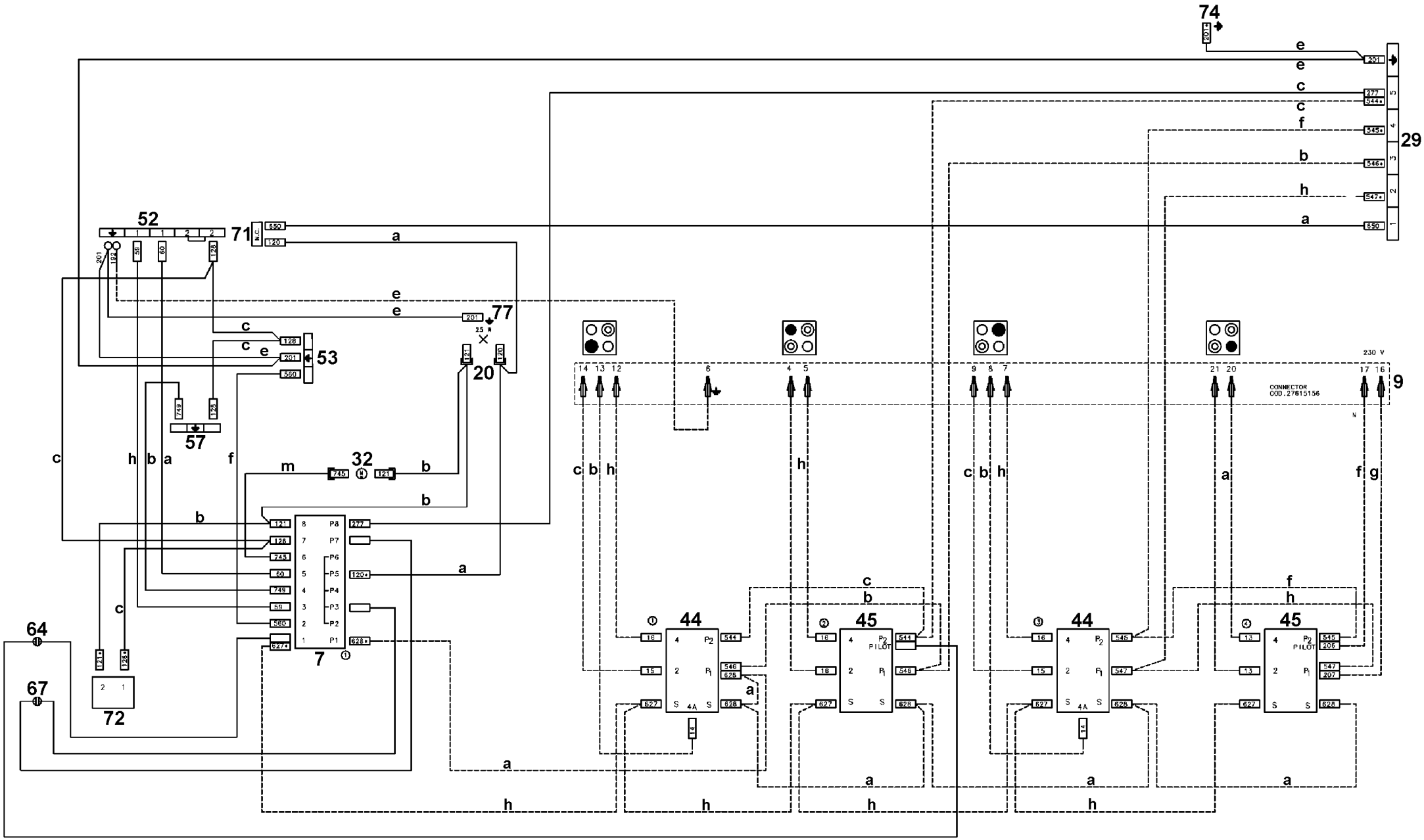
74
29
52
71
77
53
20
57
32
9
7
64
67
72
44
45
44
45
CONNECTOR
COD.27615156
230 V
PILOT

357 765001b