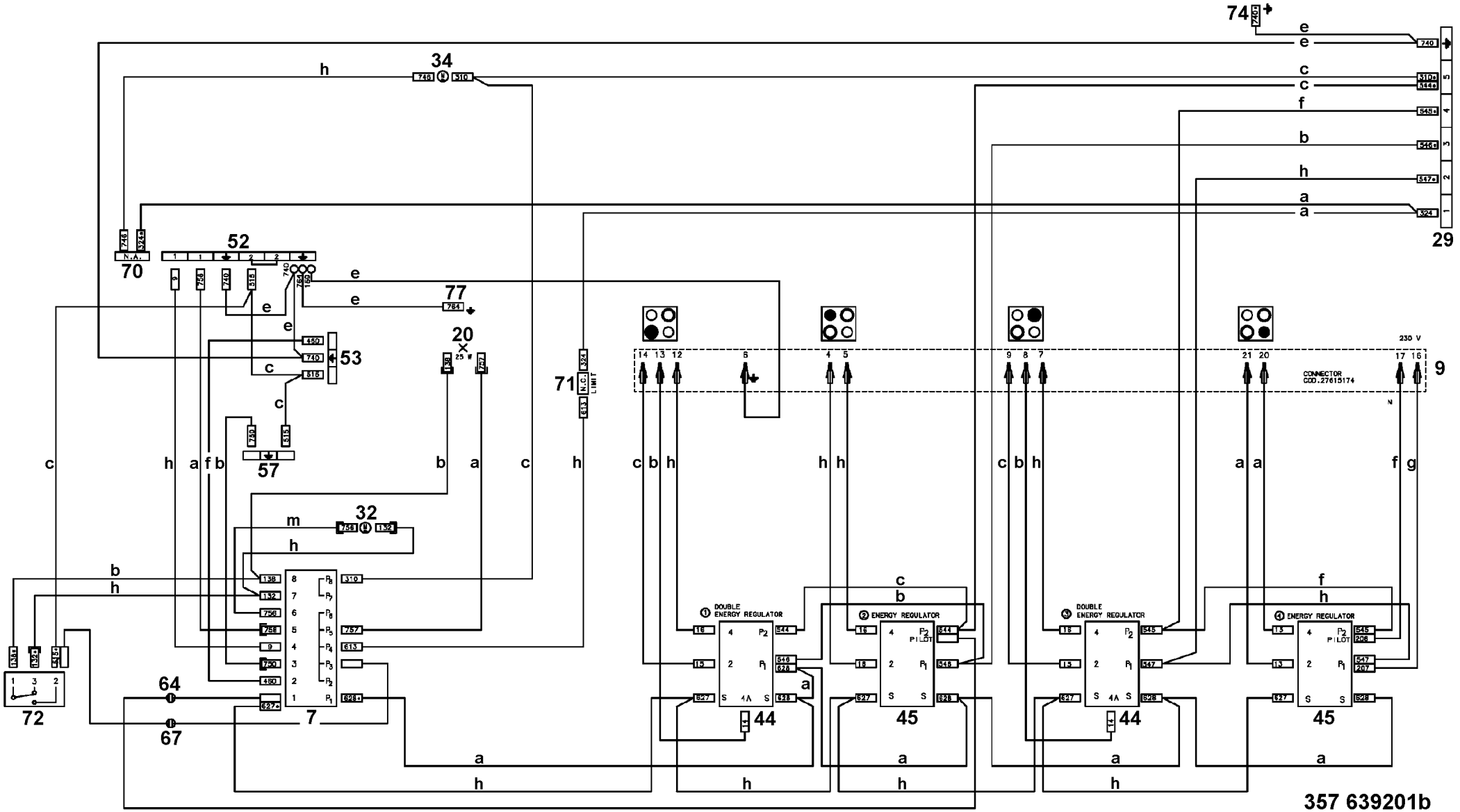
74
34
52
70
77
20
53
71
57
32
64
67
72
7
44
45
44
45
29
9
DOUBLE ENERGY REGULATOR
ENERGY REGULATOR
DOUBLE ENERGY REGULATOR
ENERGY REGULATOR
CONNECTOR COD.27615174
230 V
N.A.
N.C.
LIMIT
25 W

357 639201b