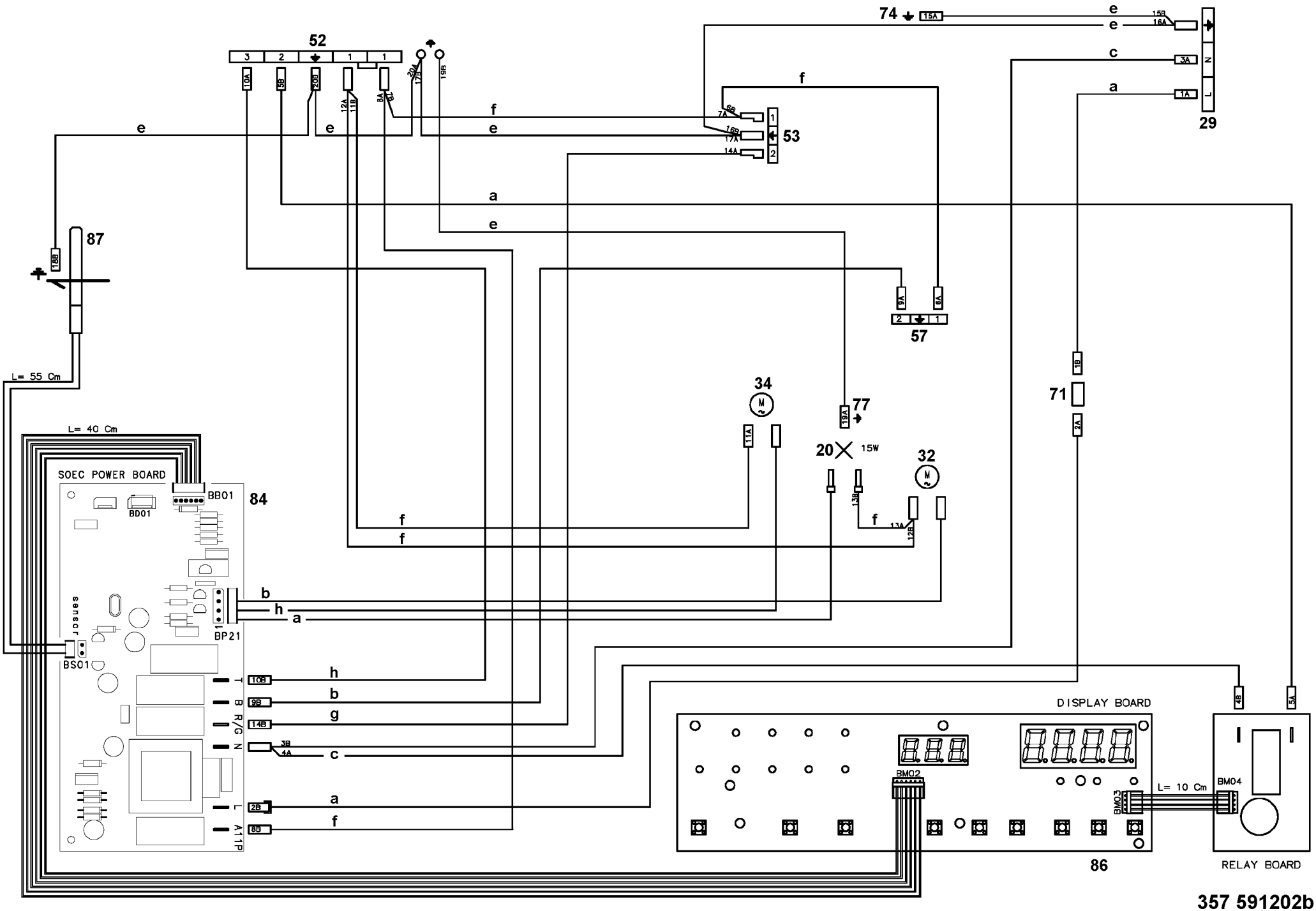
52
53
57
29
87
34
77
20
15W
32
71
84
86
L= 55 Cm
L= 40 Cm
L= 10 Cm
SOEC POWER BOARD
BB01
BD01
BP21
BS01
sensor
DISPLAY BOARD
BM02
BM03
BM04
RELAY BOARD
L
N
B
R/G
A11P

357 591202b