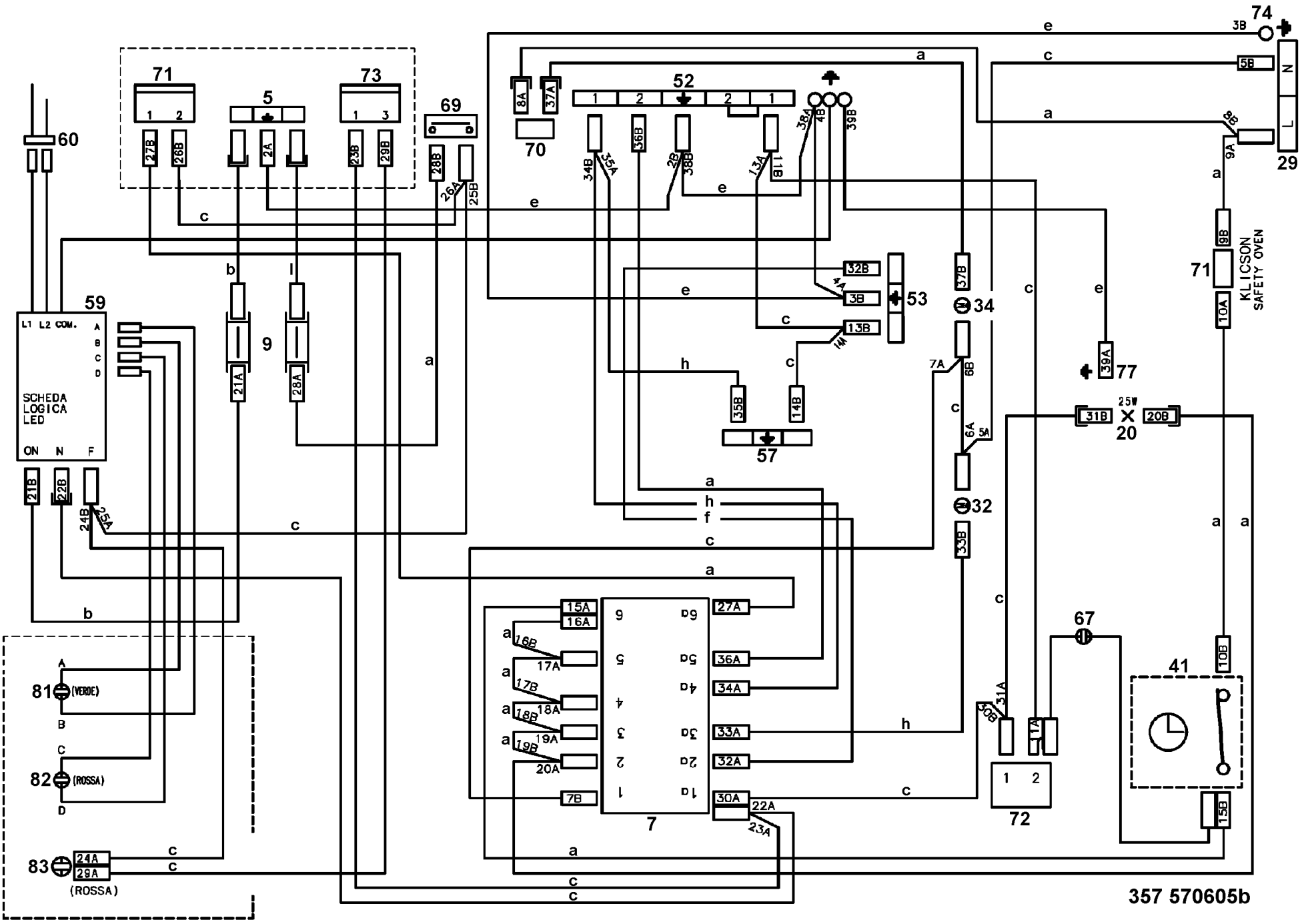
SCHEDA LOGICA LED
L1 L2 COM.
ON N F
KLICSON SAFETY OVEN
(VERDE)
(ROSSA)
(ROSSA)
357 570605b