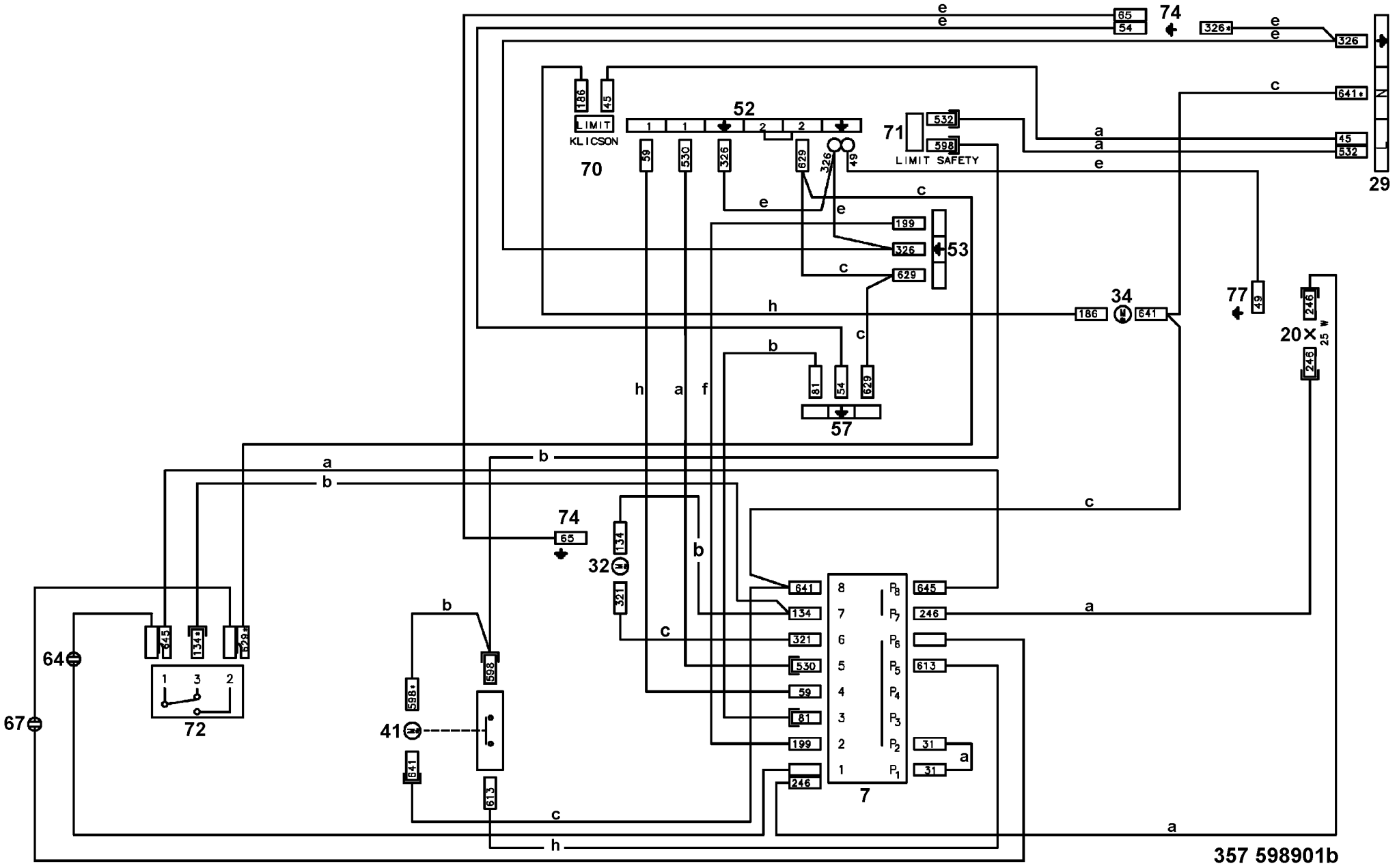
LIMIT
KLICSON
70
52
71
LIMIT SAFETY
53
57
74
29
34
77
20×
25 W
32
41
64
67
72
7
357 598901b