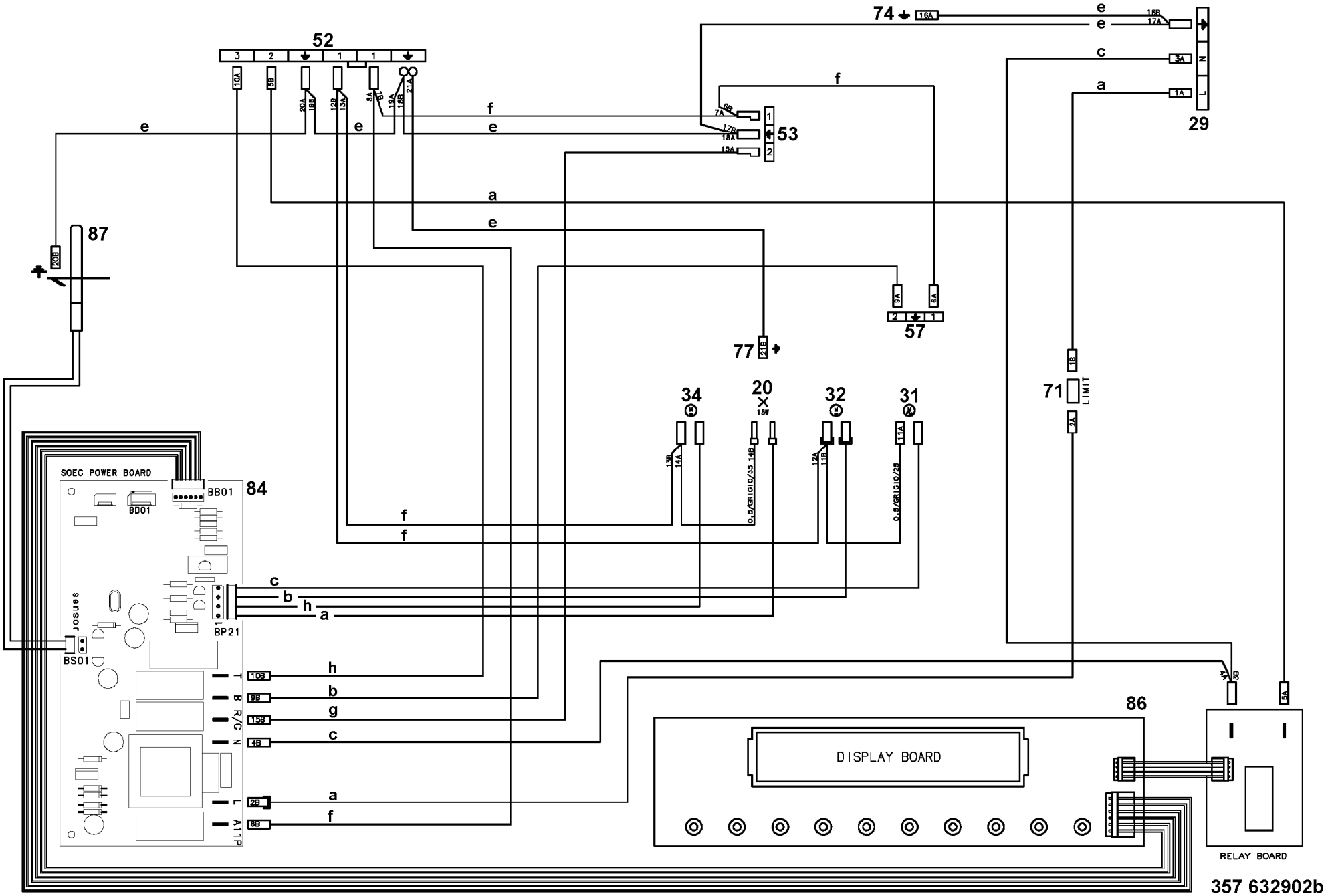
52
53
57
29
87
84
86
74
77
71
LIMIT
34
20
32
31
SOEC POWER BOARD
BB01
BD01
BP21
BS01
sensor
DISPLAY BOARD
RELAY BOARD
357 632902b