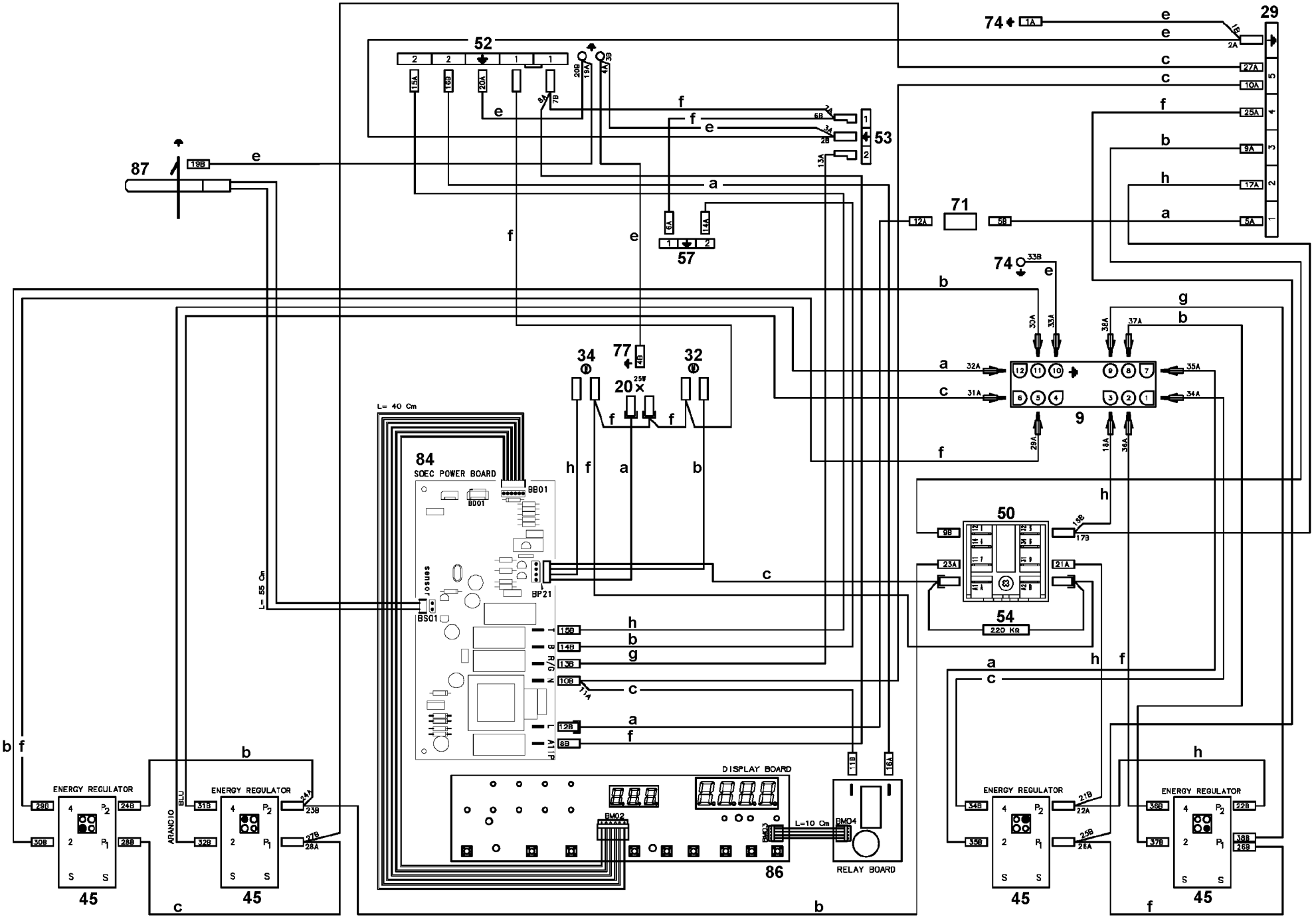
52
53
57
87
74
29
71
9
50
54
220 KΩ
34
77
32
20
84
SOEC POWER BOARD
BB01
BD01
BP21
BS01
Josues
L= 40 Cm
L= 55 Cm
DISPLAY BOARD
BM02
BM03
BM04
L=10 Cm
86
RELAY BOARD
ENERGY REGULATOR
45
ARANCIO
BLU

357 590301b