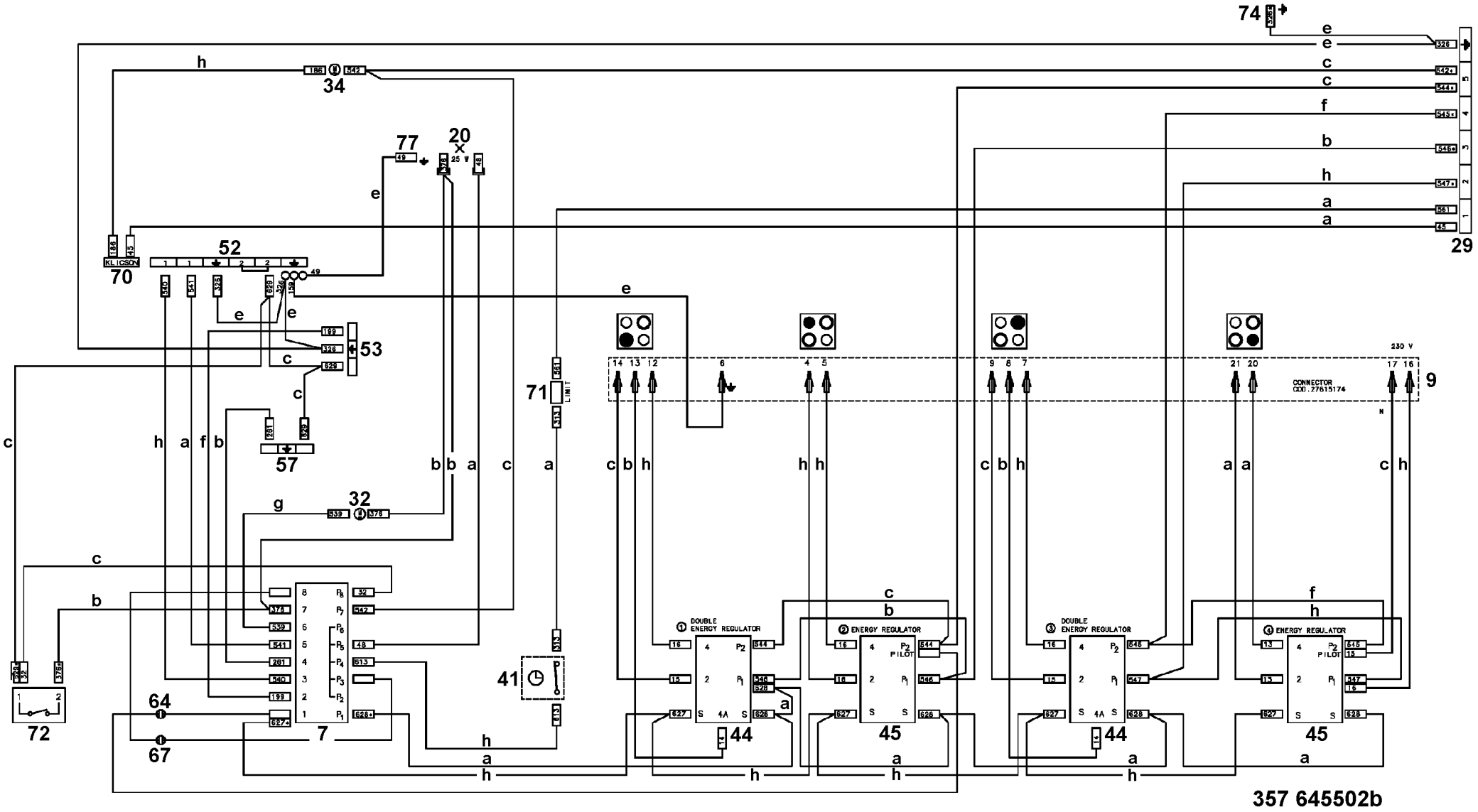
74
34
77
20
25 V
52
70
KLICSON
53
57
32
71
LIMIT
41
72
64
67
7
9
230 V
CONNECTOR
COD.27615174
29
DOUBLE ENERGY REGULATOR
ENERGY REGULATOR
PILOT
44
45

357 645502b