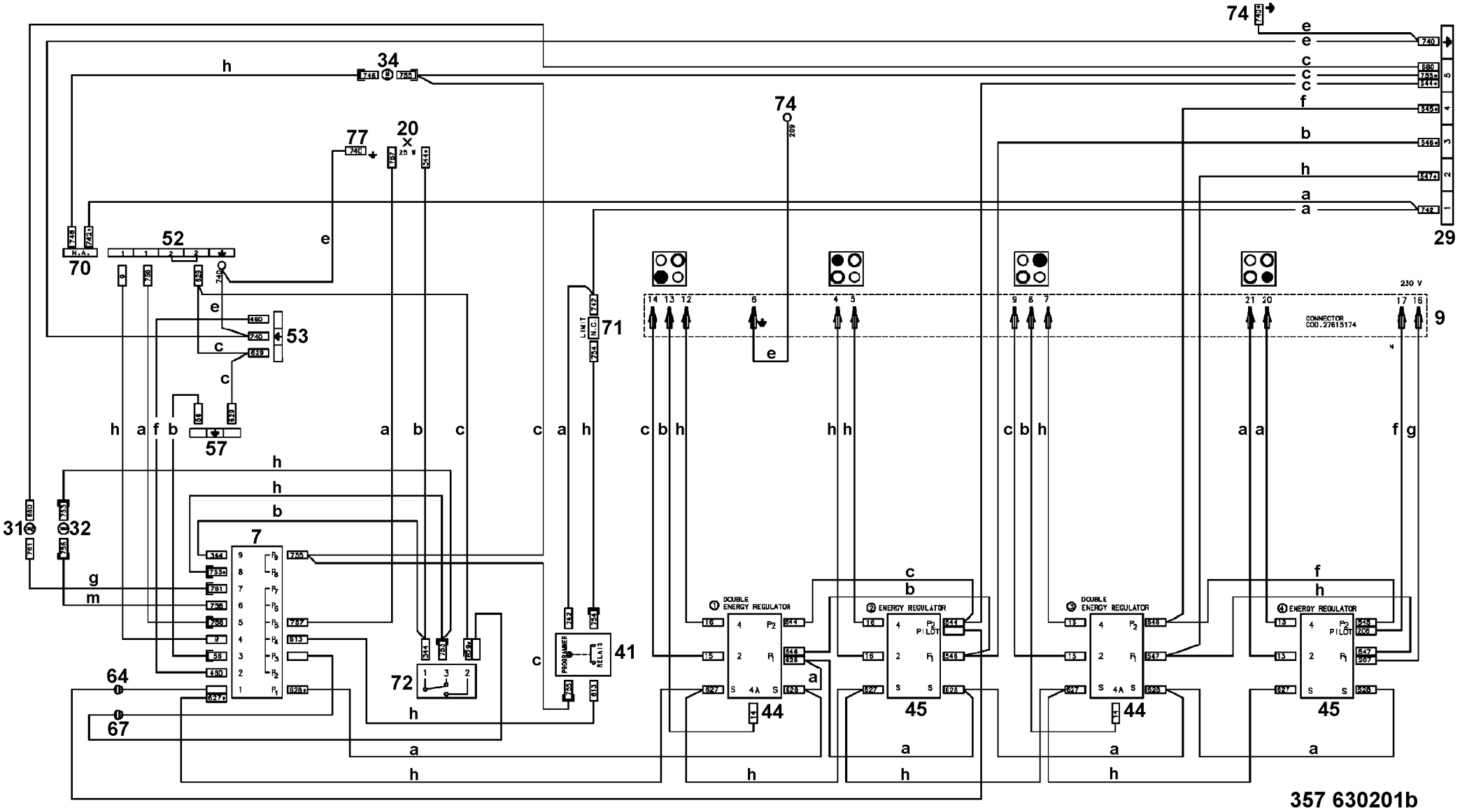
74
34
20
77
52
70
53
57
71
41
7
72
64
67
31
32
29
9
44
45
44
45
LIMIT
PROGRAMMER
RELAYS
DOUBLE ENERGY REGULATOR
ENERGY REGULATOR
PILOT
CONNECTOR COD.27615174
230 V

357 630201b