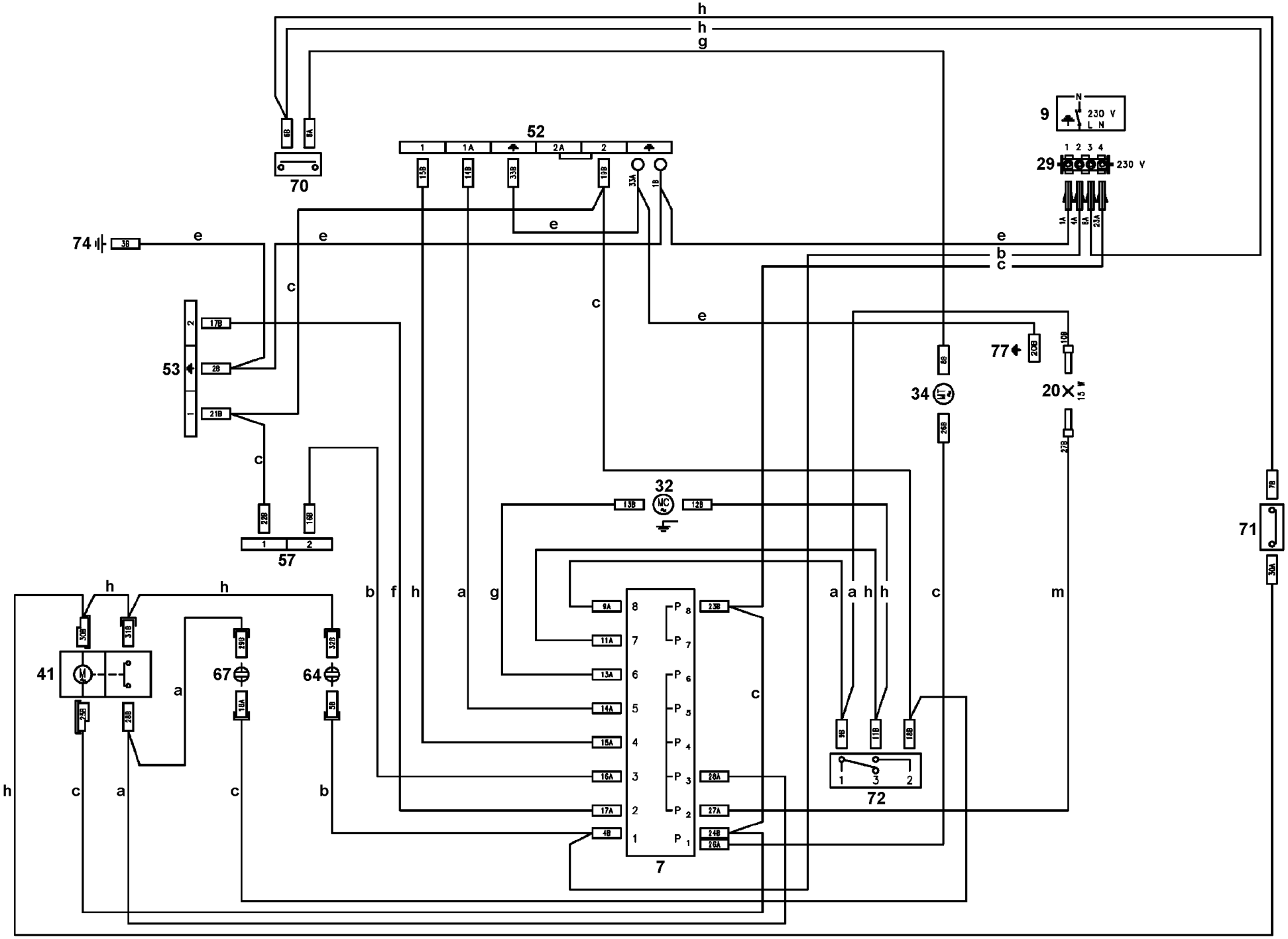
h
h
g
6B
6A
70
52
1
1A
2A
2
15B
14B
33B
19B
35A
1B
9
N
230 V
L N
1 2 3 4
29
230 V
1A
4A
8A
25A
74
3B
e
e
e
e
b
c
c
c
c
e
53
2
17B
2B
21B
77
20B
10B
6B
34
26B
20
15 W
27B
c
22B
16B
57
1
2
32
13B
12B
7B
71
30A
h
h
h
b
f
h
a
g
a
a
h
h
c
m
30B
31B
41
M
29B
32B
67
64
a
13A
5B
25B
28B
c
9A
11A
13A
14A
15A
16A
17A
4B
8
7
6
5
4
3
2
1
P 8
P 7
P 6
P 5
P 4
P 3
P 2
P 1
23B
28A
27A
24B
26A
7
9B
11B
18B
1
3
2
72
h
c
a
c
b

357 571705b