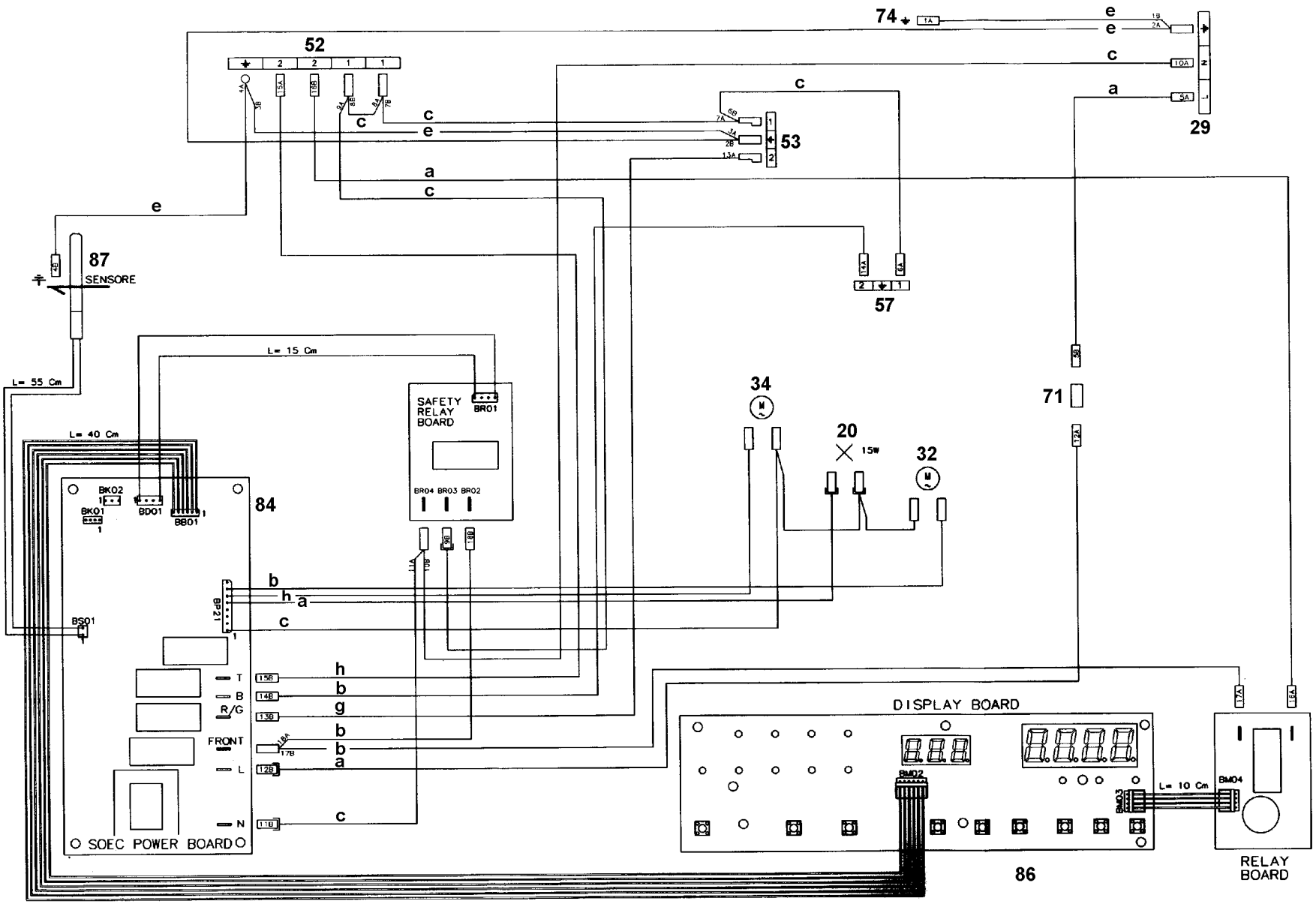
74
52
53
29
57
87
SENSORE
L= 55 Cm
L= 15 Cm
L= 40 Cm
SAFETY RELAY BOARD
BR01
BR04 BR03 BR02
34
20
15W
32
71
84
BK02
BK01
BD01
BB01
BP21
BS01
T
B
R/G
FRONT
L
N
SOEC POWER BOARD
DISPLAY BOARD
BM02
BM03
BM04
L= 10 Cm
86
RELAY BOARD

357 570102b