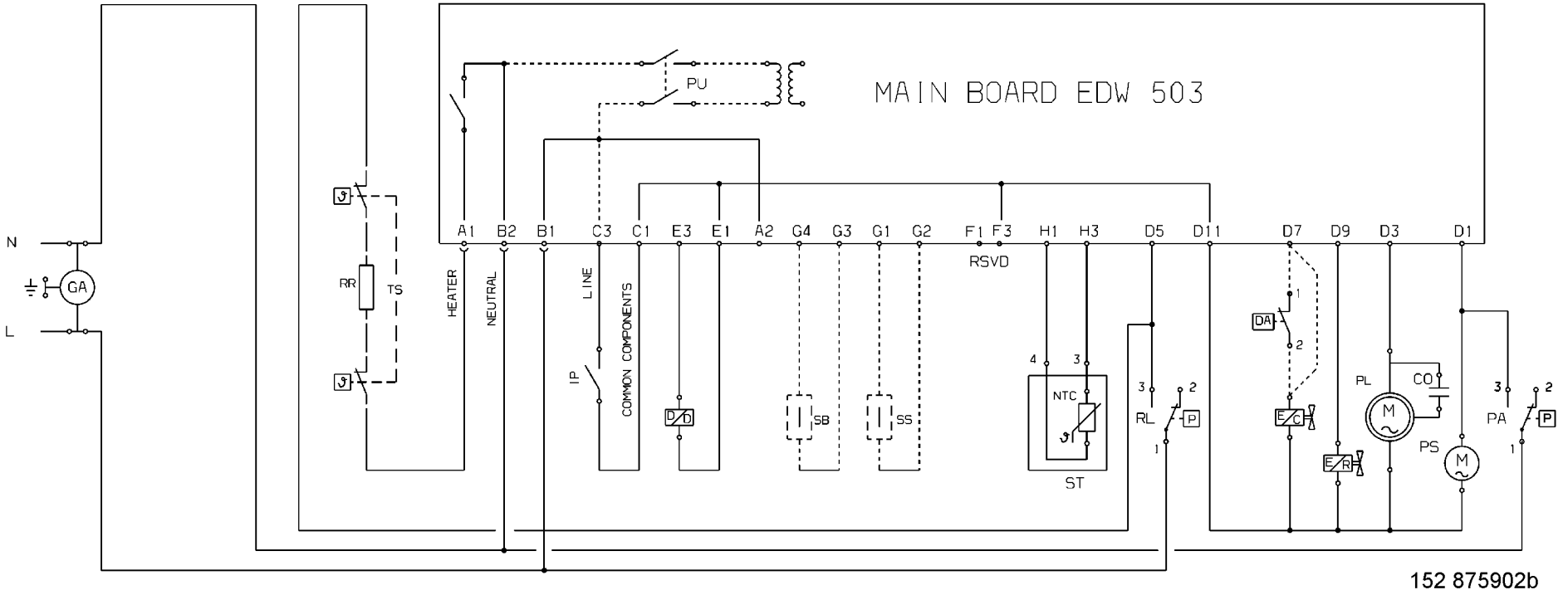
MAIN BOARD EDW 503
PU
N
L
GA
RR
TS
HEATER
NEUTRAL
LINE
IP
COMMON COMPONENTS
A1
B2
B1
C3
C1
E3
E1
A2
G4
G3
G1
G2
F1
F3
RSVD
H1
H3
D5
D11
D7
D9
D3
D1
D
SB
SS
NTC
ST
RL
P
DA
E
C
R
PL
M
CO
PS
PA

152 875902b