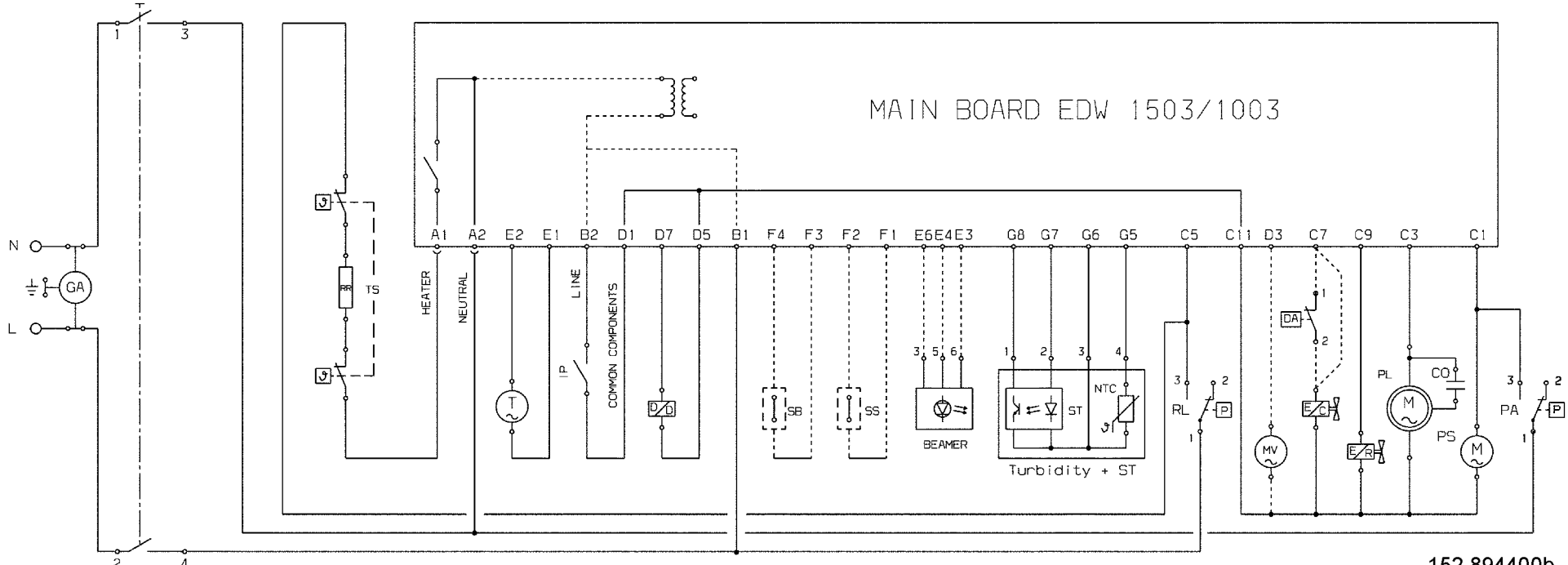
MAIN BOARD EDW 1503/1003
N
L
GA
TS
HEATER
NEUTRAL
LINE
IP
COMMON COMPONENTS
A1
A2
E2
E1
B2
D1
D7
D5
B1
F4
F3
F2
F1
E6
E4
E3
G8
G7
G6
G5
C5
C11
D3
C7
C9
C3
C1
SB
SS
BEAMER
ST
NTC
Turbidity + ST
RL
DA
MV
PL
CO
PS
PA
1
3
2
4

152 894400b