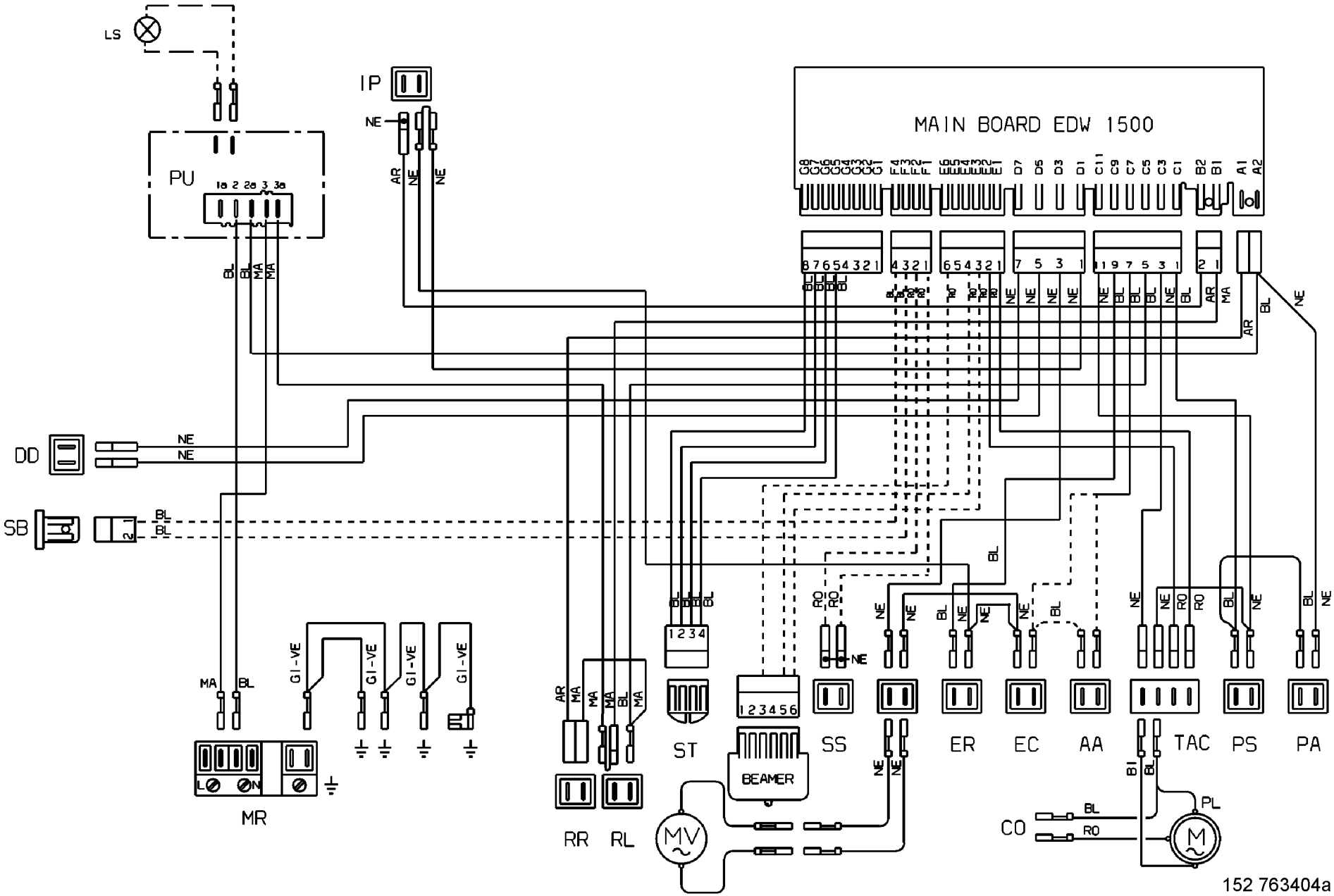
LS
PU
IP
MAIN BOARD EDW 1500
DD
SB
MR
RR
RL
MV
ST
BEAMER
SS
ER
EC
AA
TAC
PS
PA
CO
M
PL
152 763404a