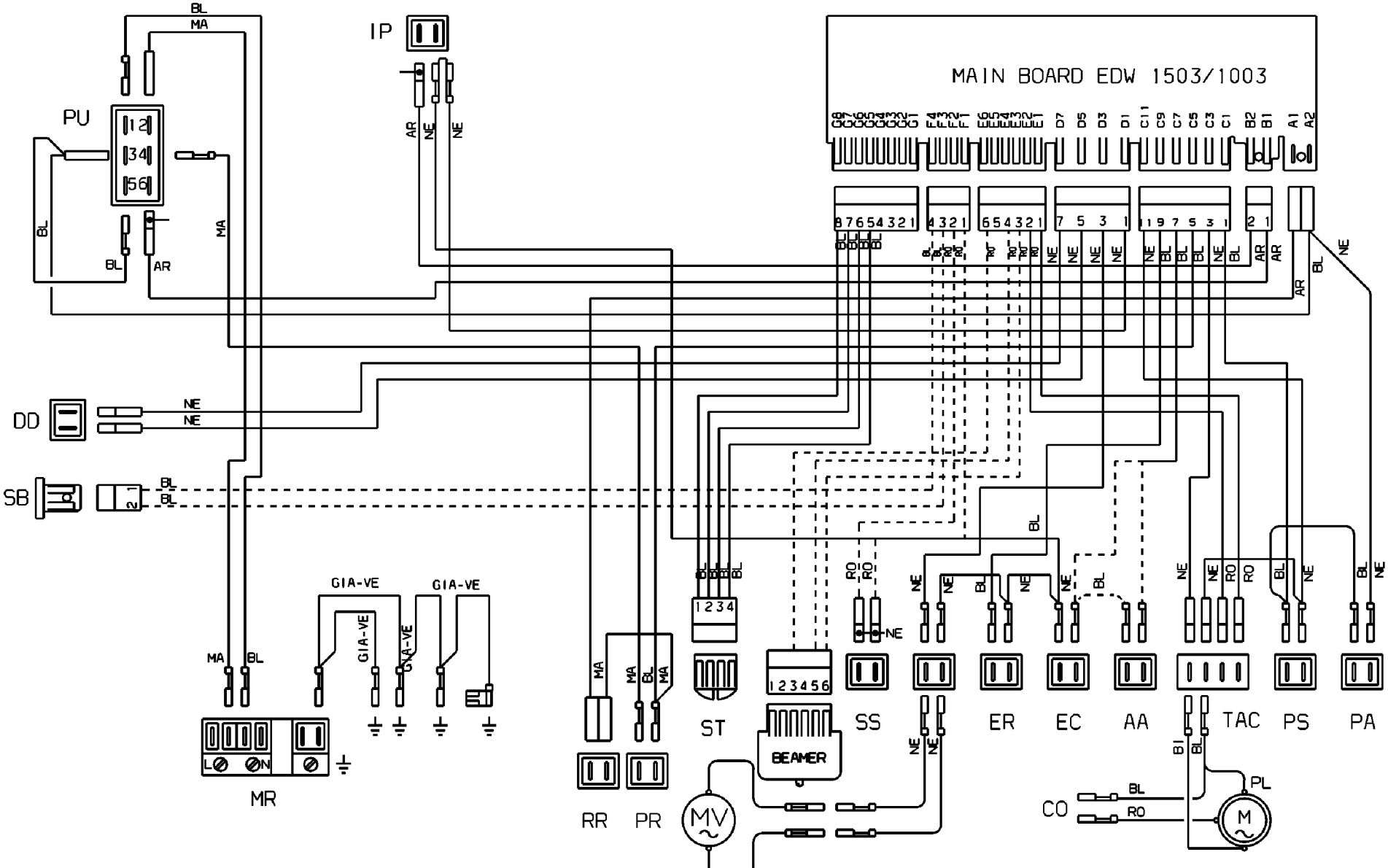
MAIN BOARD EDW 1503/1003
PU
IP
DD
SB
MR
RR
PR
ST
BEAMER
SS
ER
EC
AA
TAC
PS
PA
CO
MV
M
GIA-VE
BL
MA
AR
NE
RO
PL
152 691403a