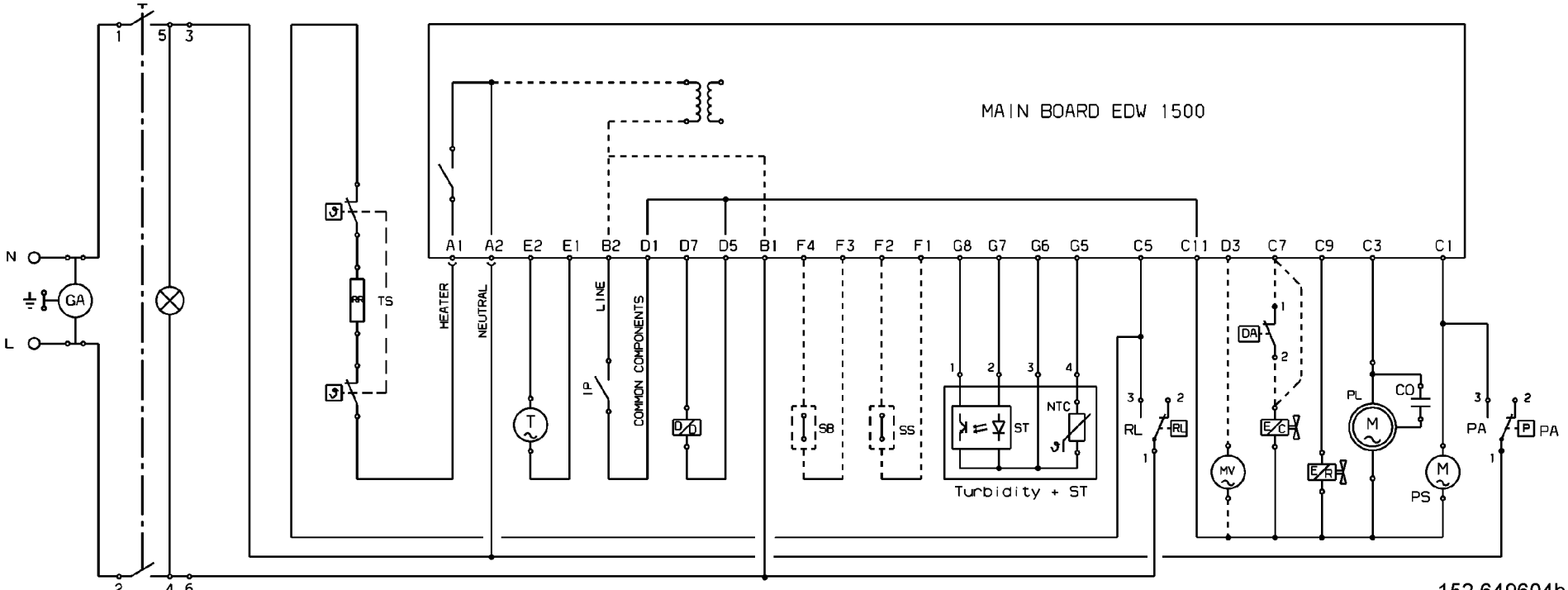
MAIN BOARD EDW 1500
N
L
GA
TS
HEATER
NEUTRAL
LINE
IP
COMMON COMPONENTS
A1 A2 E2 E1 B2 D1 D7 D5 B1 F4 F3 F2 F1 G8 G7 G6 G5 C5 C11 D3 C7 C9 C3 C1
SB
SS
ST
NTC
Turbidity + ST
RL
DA
MV
PL
CO
PS
PA
P
152 649604b