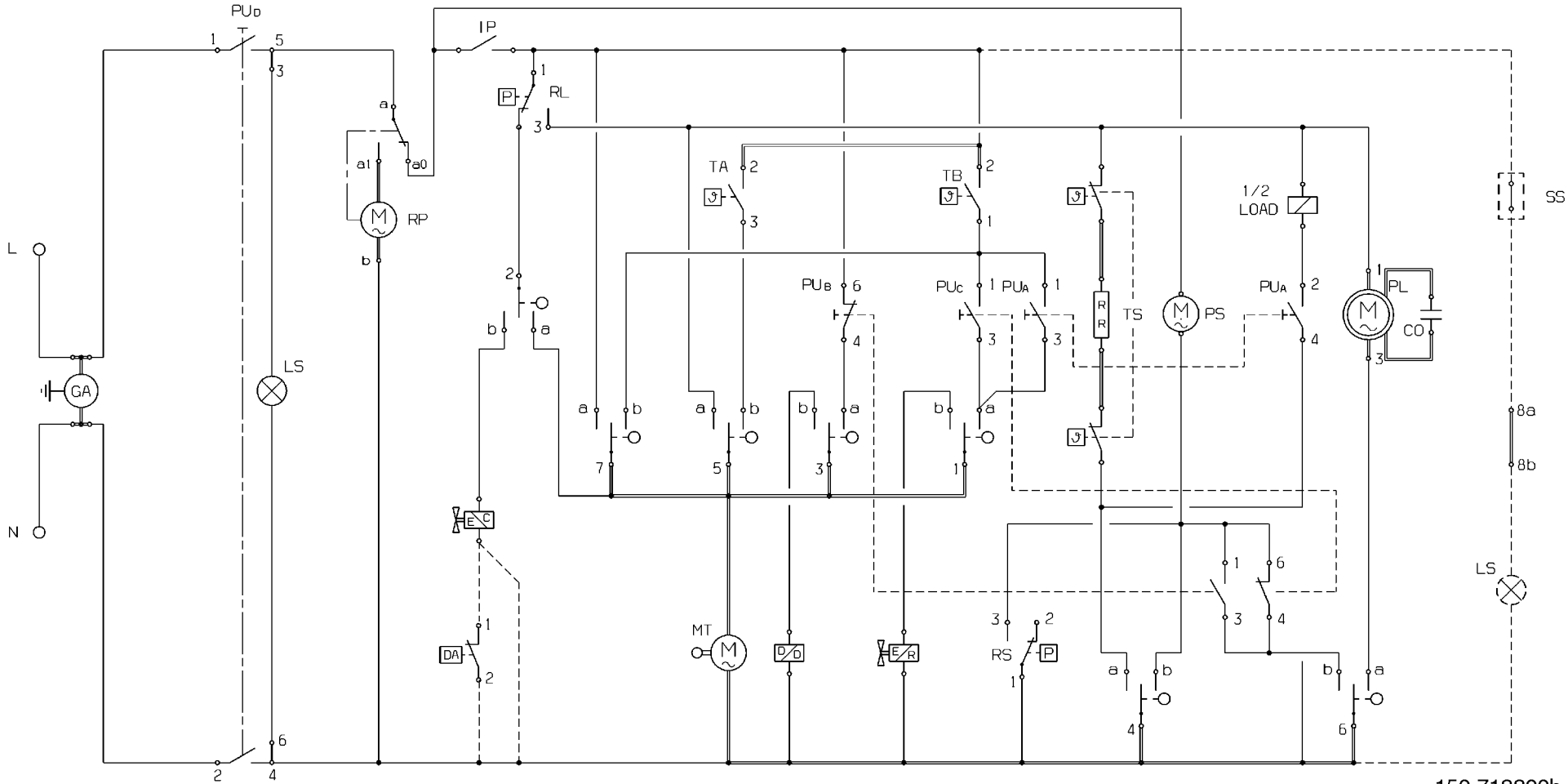
PUD
IP
RL
P
TA
TB
1/2
LOAD
SS
L
N
GA
LS
RP
M
a1
a0
PUB
PUC
PUA
TS
PS
PL
CO
8a
8b
EC
DA
MT
D/D
E/R
RS
152 718802b