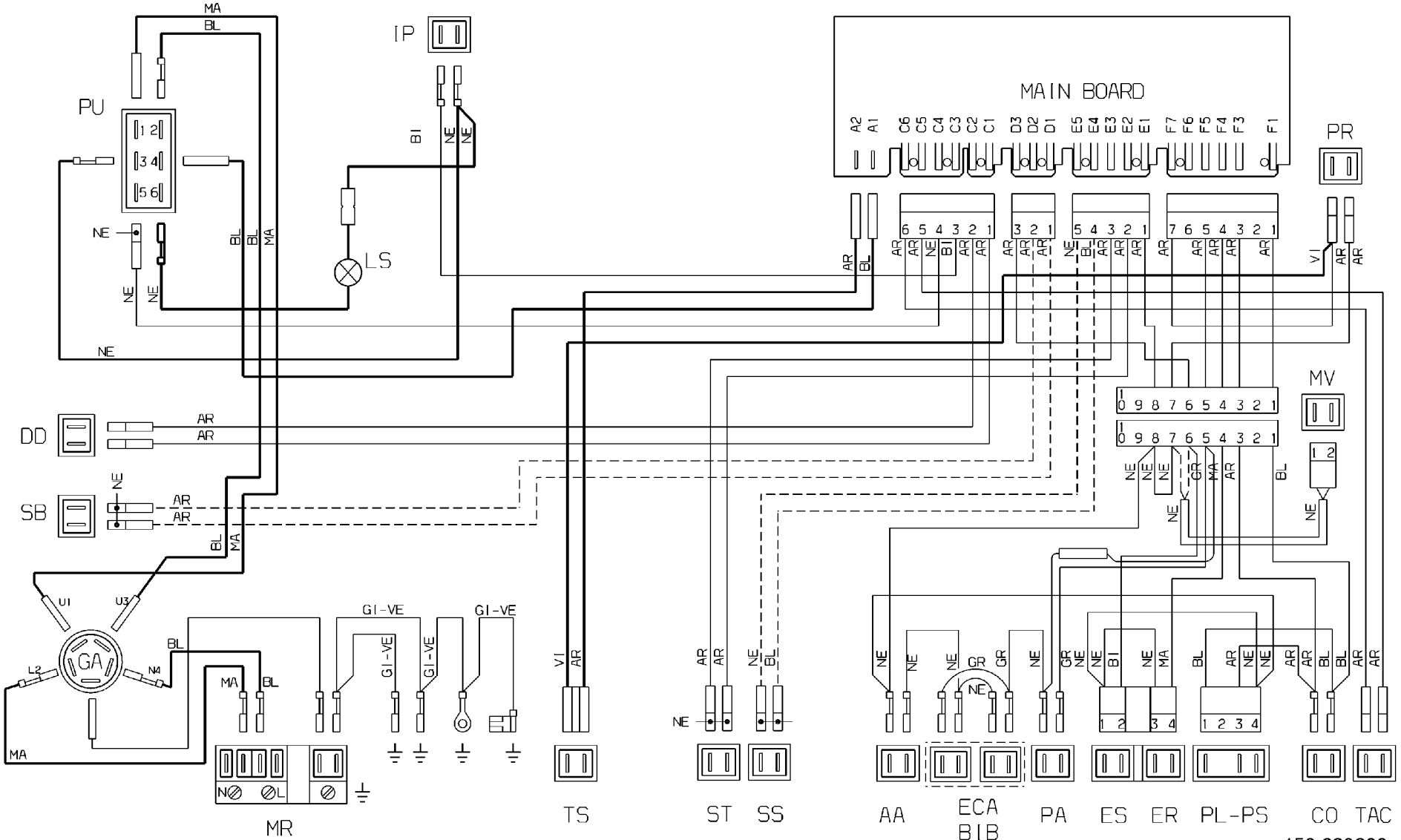
MAIN BOARD
PU
IP
PR
LS
DD
SB
MV
GA
MR
TS
ST
SS
AA
ECA
BIB
PA
ES
ER
PL-PS
CO
TAC
GI-VE
152 689800a