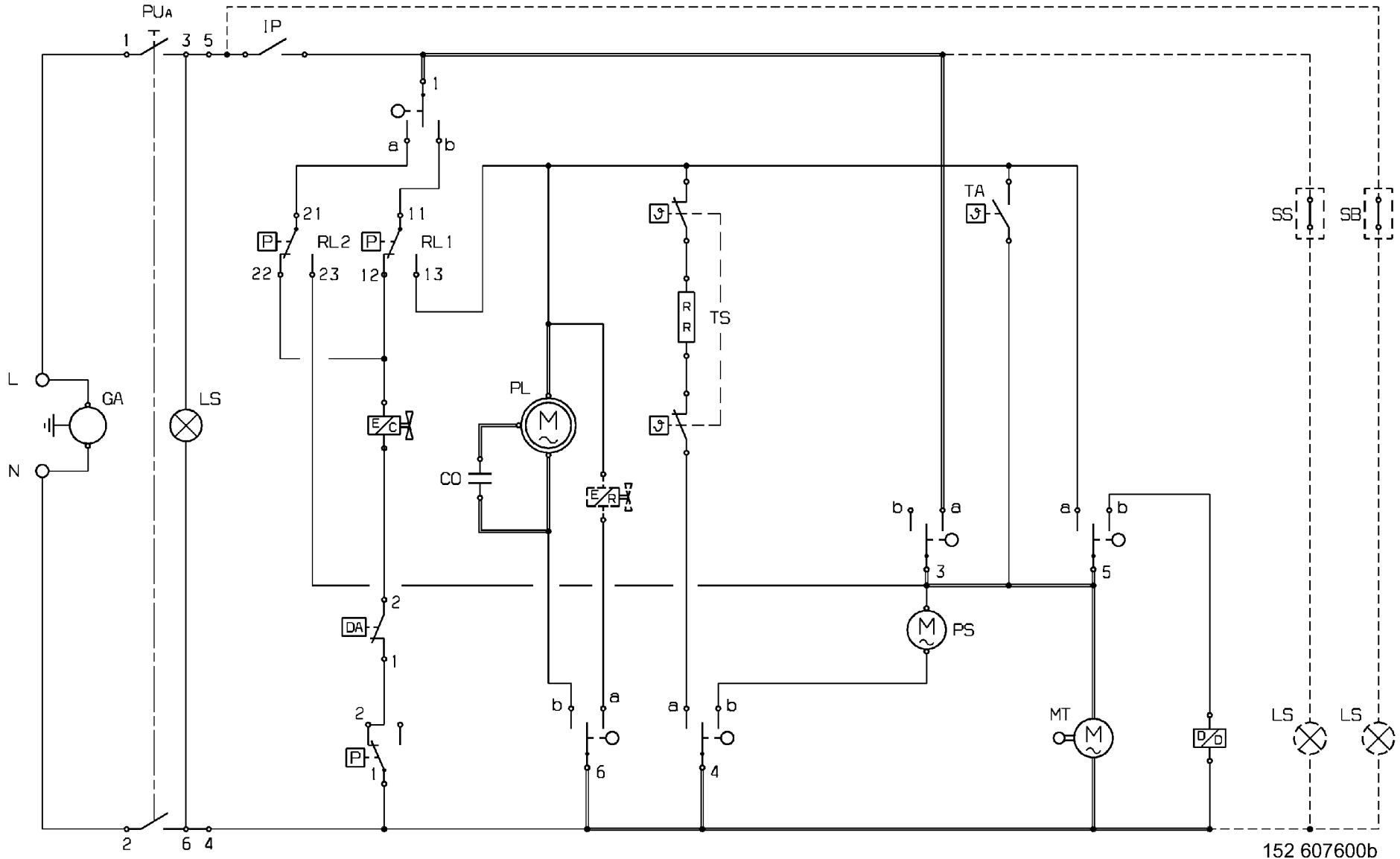
PUA
IP
1
3
5
L
N
GA
LS
2
6
4
21
22
23
11
12
13
RL2
RL1
P
E/C
DA
PL
CO
E/R
TS
R
R
TA
SS
SB
b
a
3
5
PS
MT
D/D
6
4

152 607600b