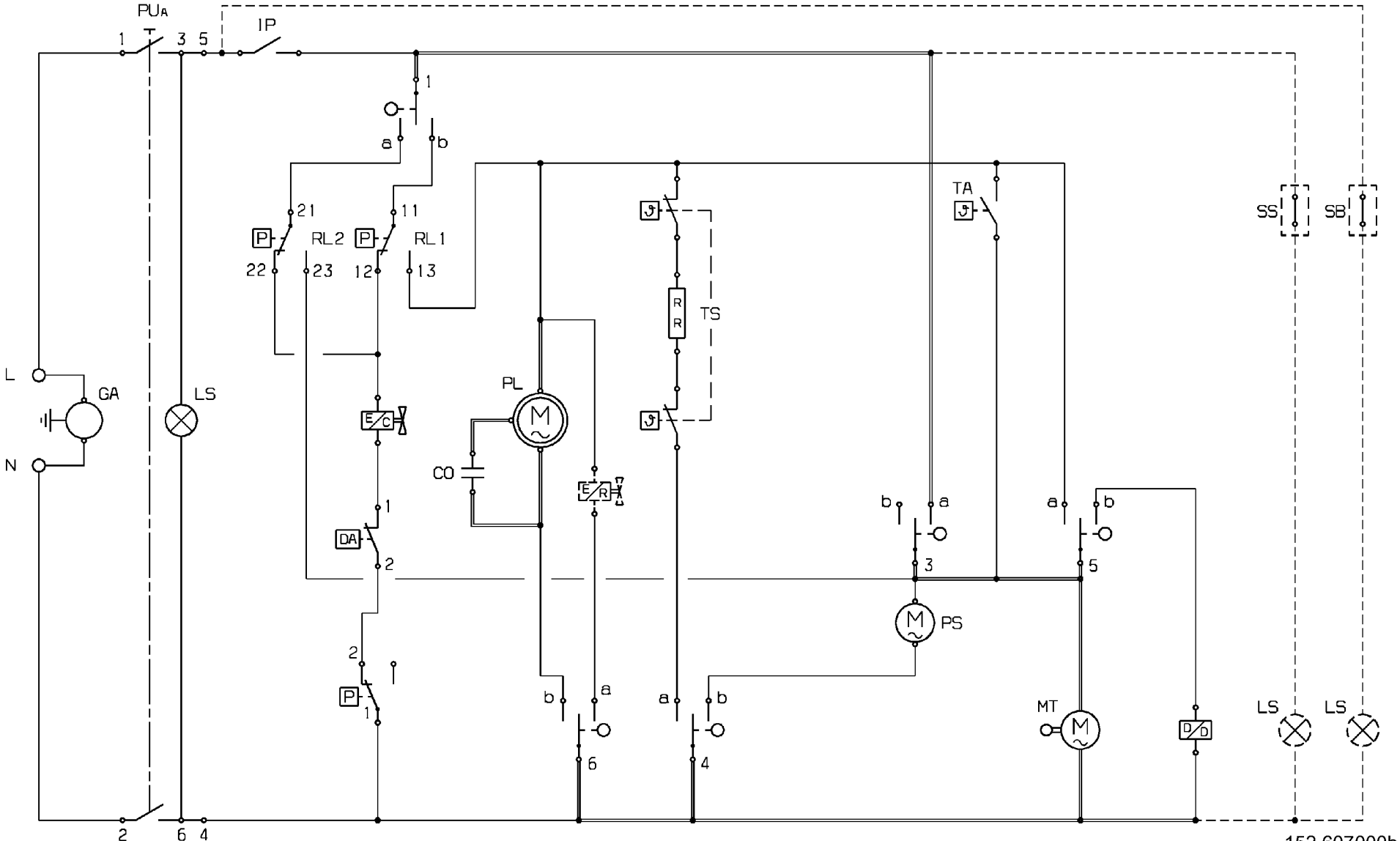
PUA
IP
1
3
5
a
b
21
11
RL2
RL1
22
23
12
13
L
N
GA
LS
E/C
DA
2
P
PL
M
CO
E/R
R
R
TS
TA
SS
SB
PS
MT
D/D
6
4
152 607000b