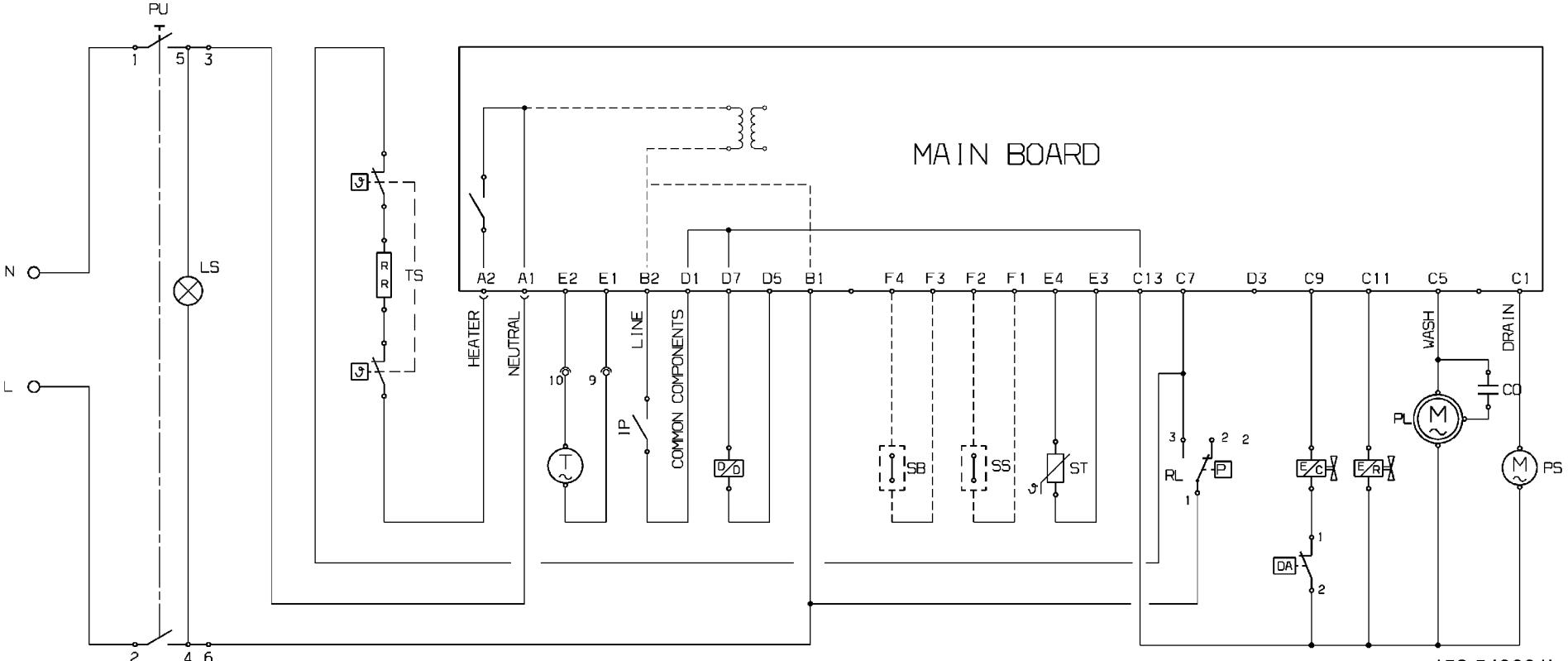
PU
1
5
3
N
L
LS
TS
MAIN BOARD
A2
A1
E2
E1
B2
D1
D7
D5
B1
F4
F3
F2
F1
E4
E3
C13
C7
D3
C9
C11
C5
C1
HEATER
NEUTRAL
LINE
COMMON COMPONENTS
10
9
IP
SB
SS
ST
RL
P
DA
WASH
DRAIN
CO
PL
PS
2
4
6

152 540001b