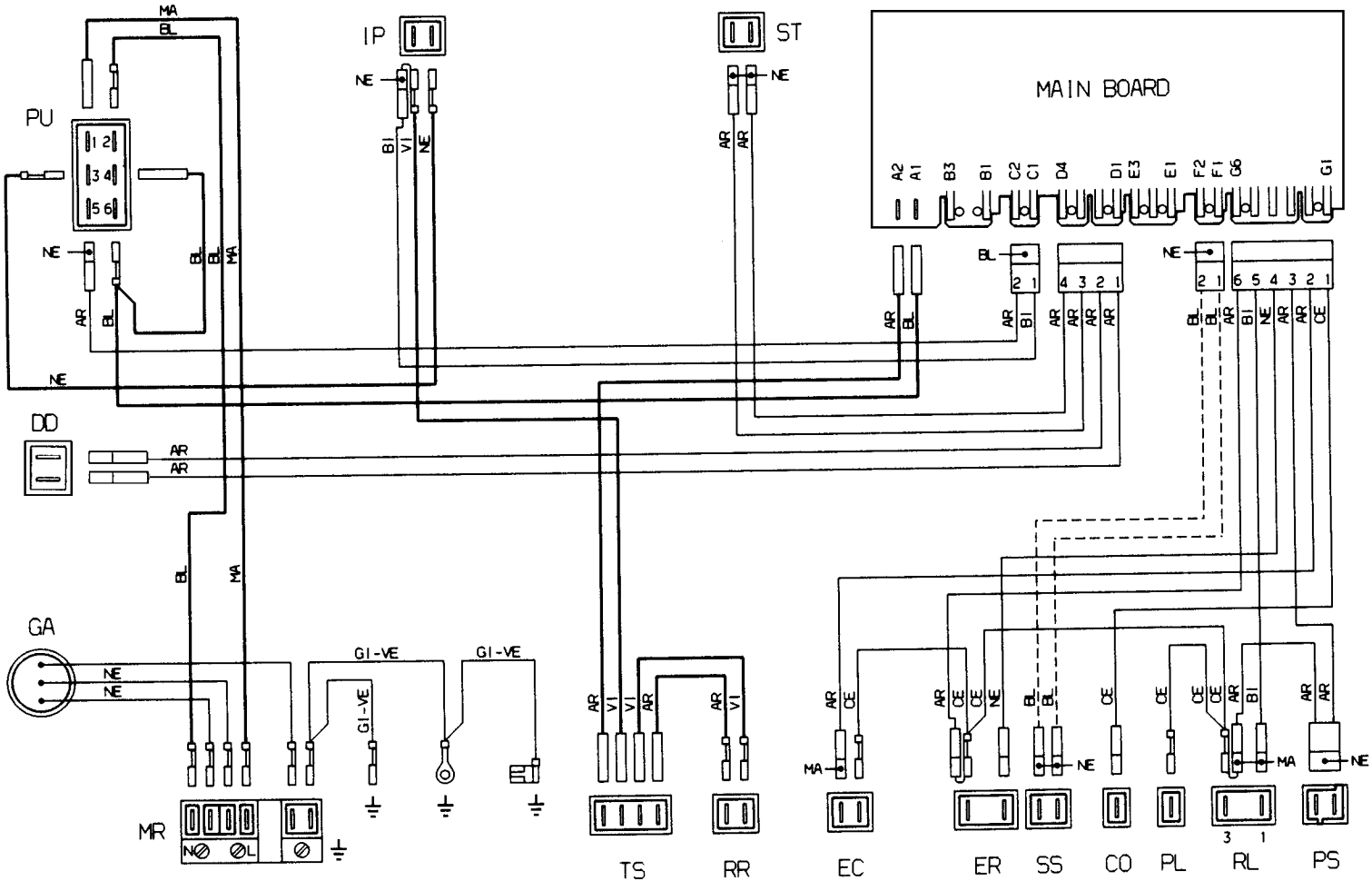
MAIN BOARD
PU
IP
ST
DD
GA
MR
TS
RR
EC
ER
SS
CO
PL
RL
PS
GI-VE
152 295503.a