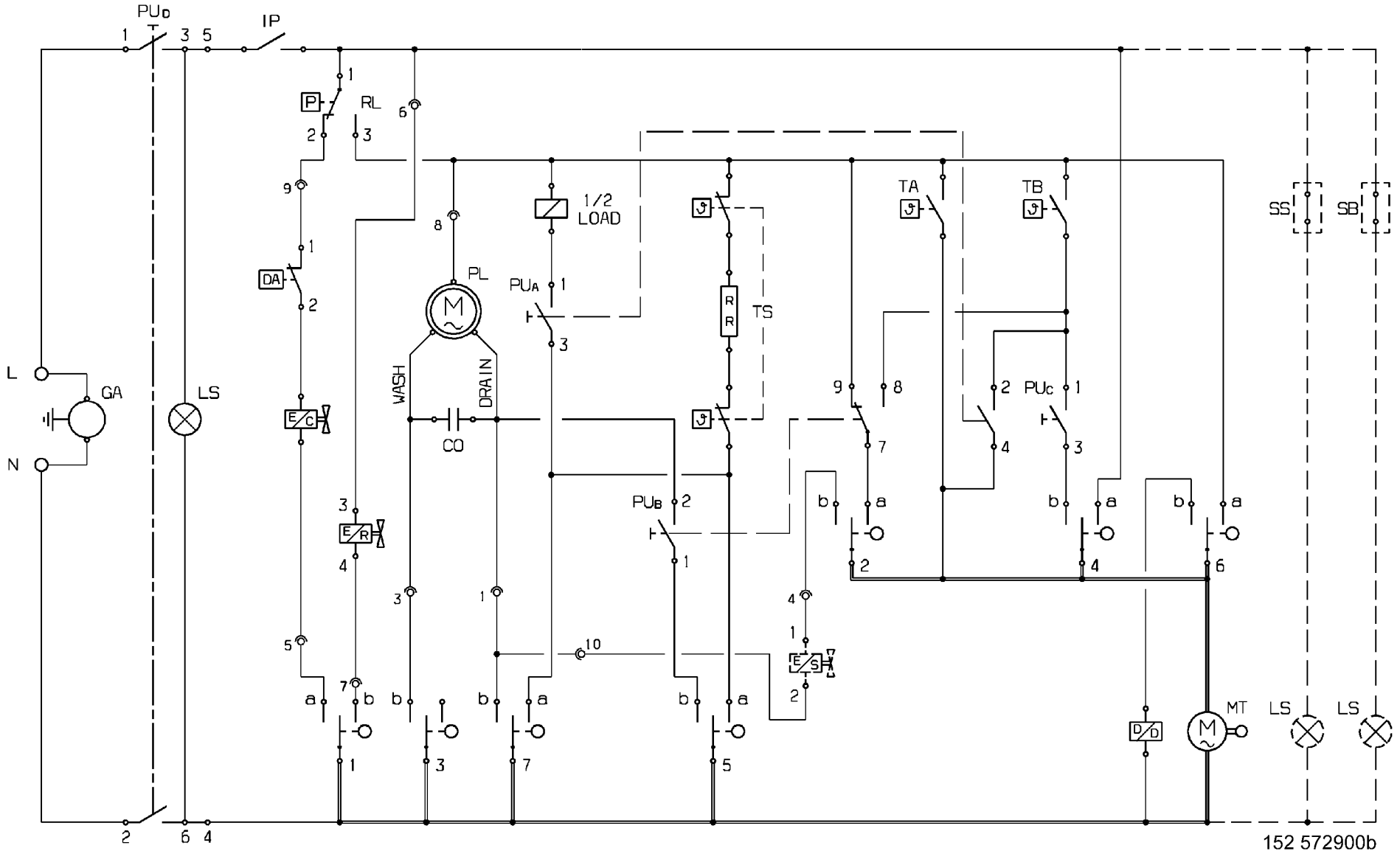
PUD
IP
RL
P
DA
E/C
E/R
E/S
D/D
PL
M
WASH
DRAIN
CO
1/2
LOAD
PUA
PUB
PUC
TS
R
R
TA
TB
SS
SB
L
N
GA
LS
MT
152 572900b