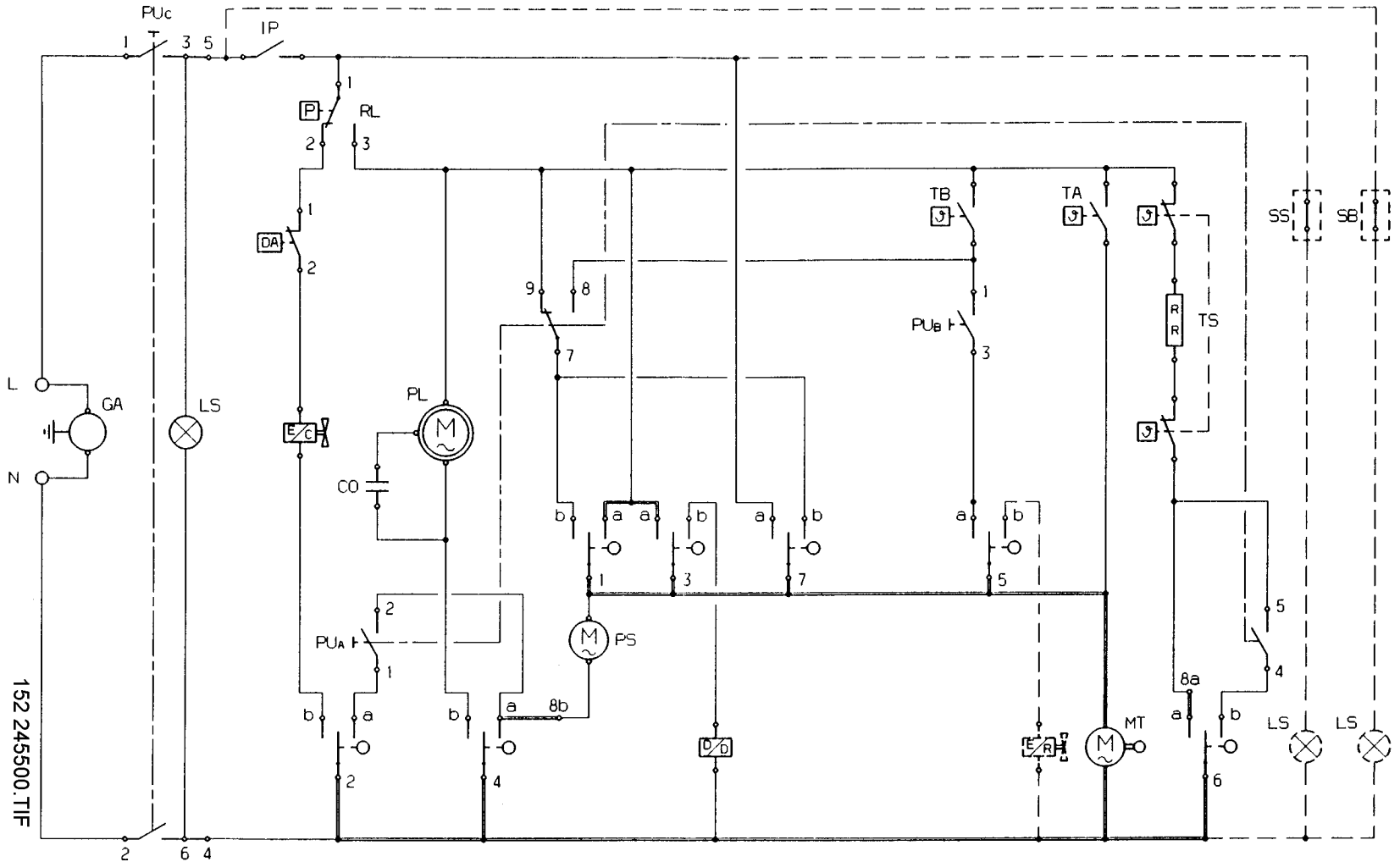
PUc
IP
P
RL
DA
E/C
PL
CO
LS
GA
L
N
PUA
PS
8b
8a
D/D
E/R
MT
TB
TA
PUB
TS
SS
SB
152 245500.TIF