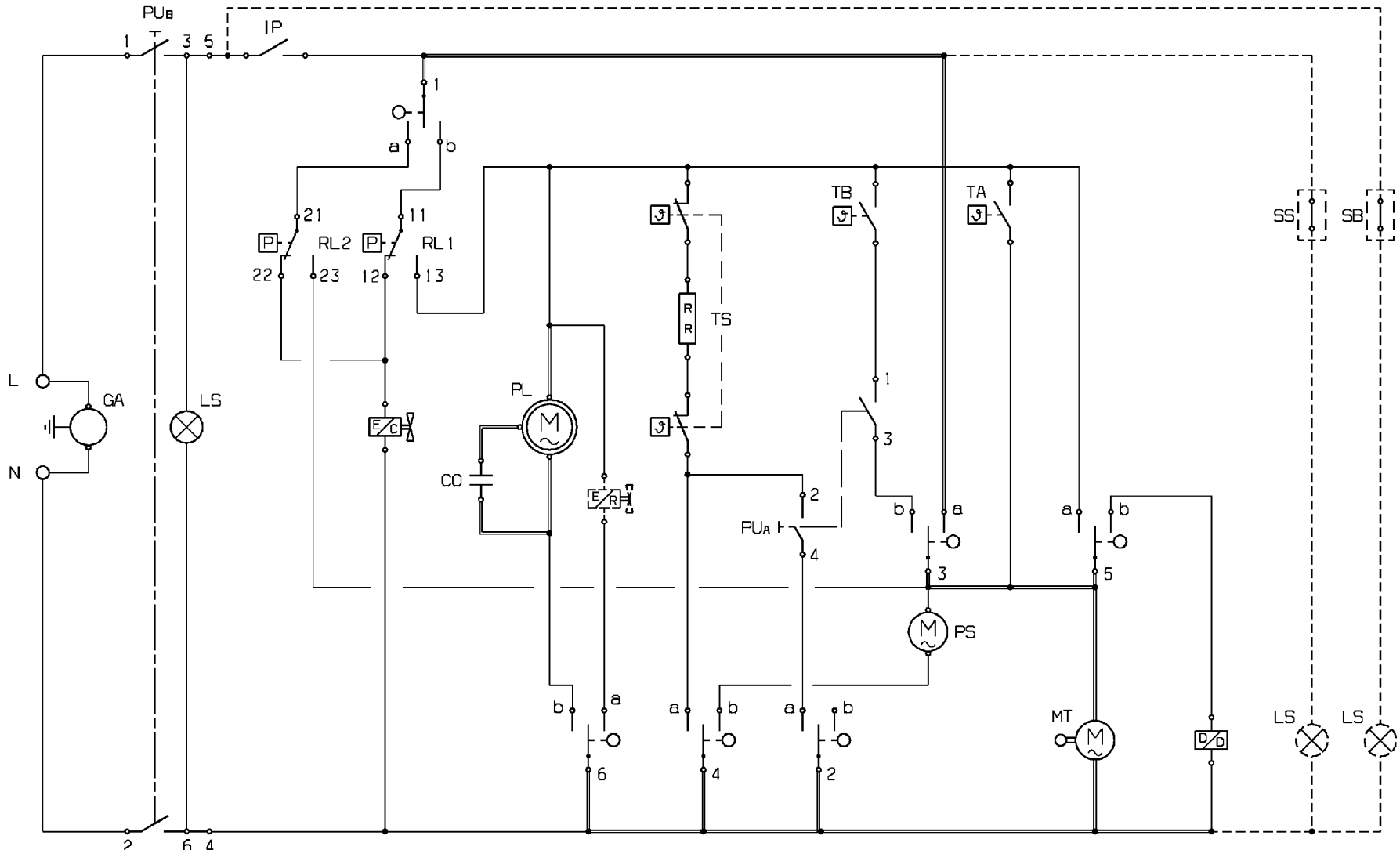


152 520100b