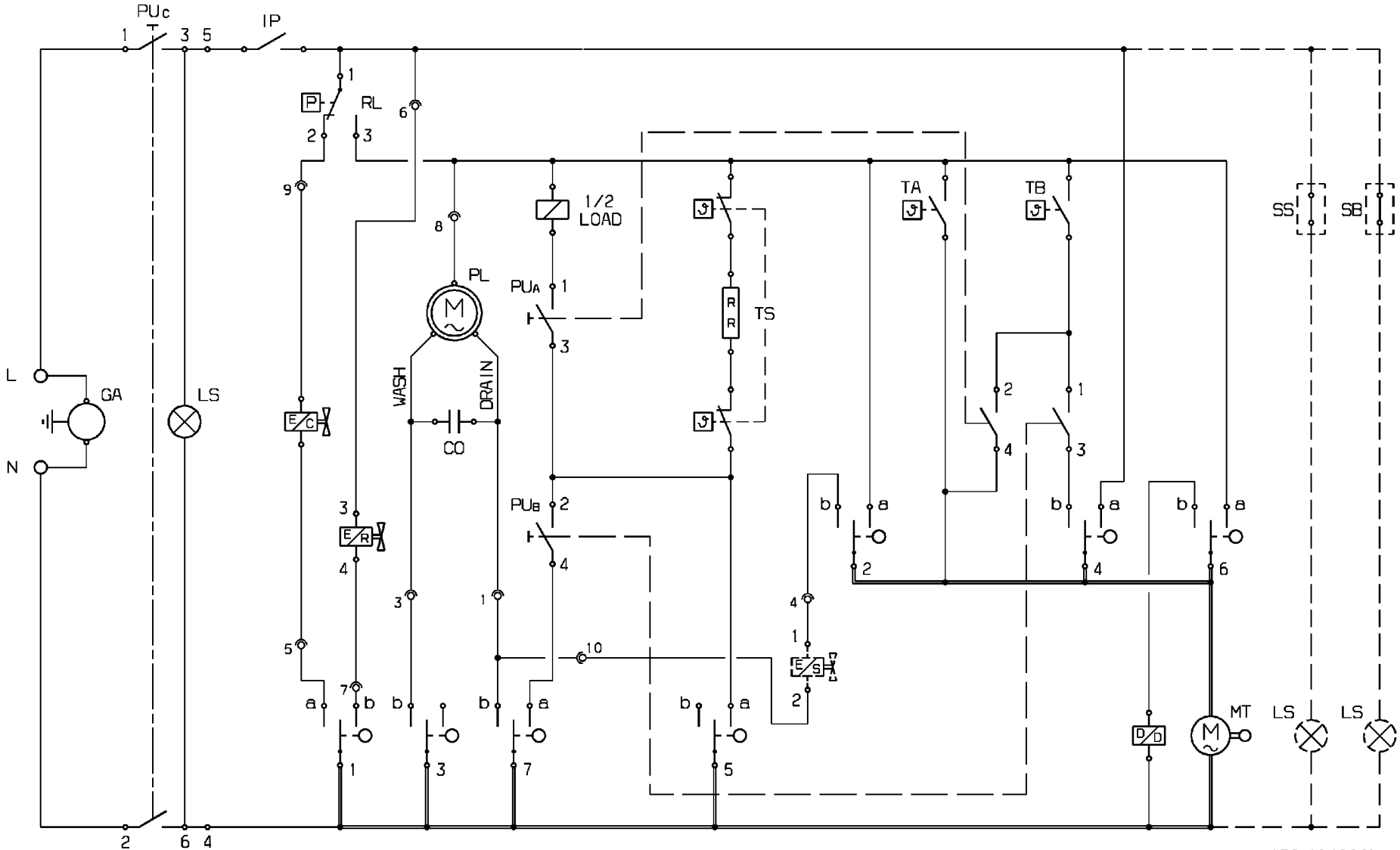
PUc
IP
RL
1/2
LOAD
PL
PUA
PUB
TS
TA
TB
SS
SB
L
N
GA
LS
WASH
DRAIN
CO
MT
LS
LS

152 494000b