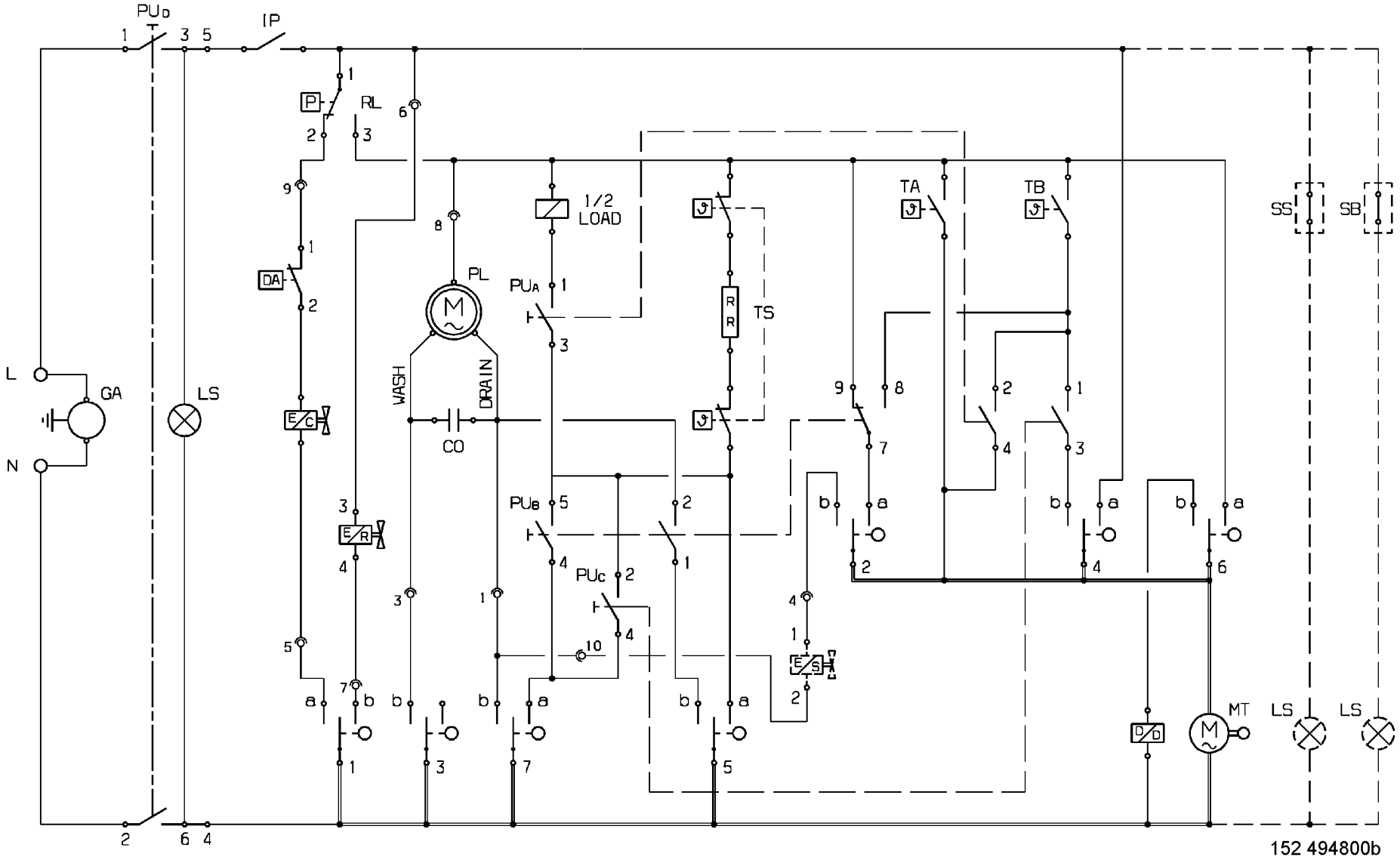
PUD
IP
RL
P
DA
E/C
E/R
E/S
D/D
L
N
GA
LS
PL
WASH
DRAIN
CO
1/2
LOAD
PUA
PUB
PUC
TS
TA
TB
SS
SB
MT
LS
LS

152 494800b