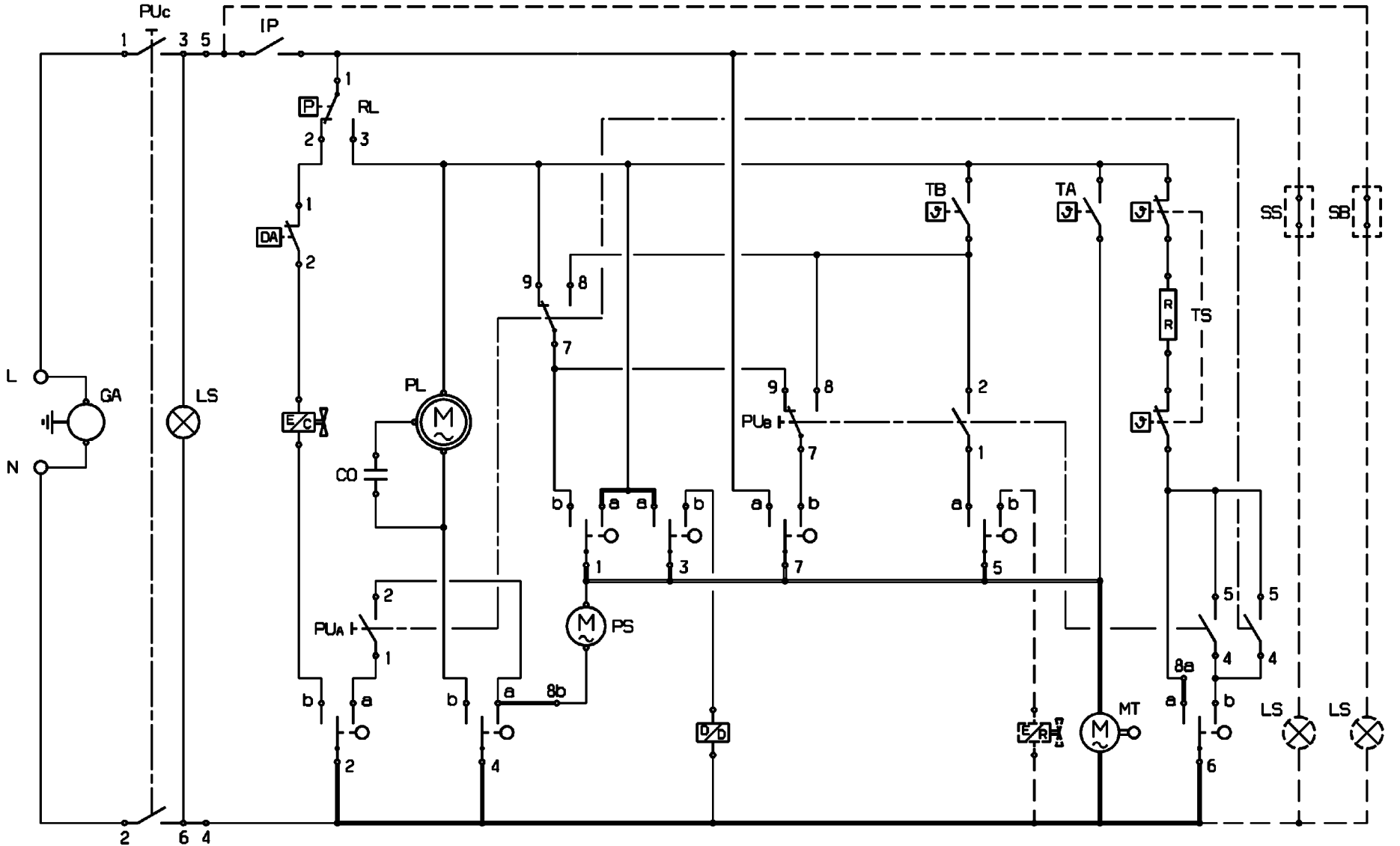


152 467300b