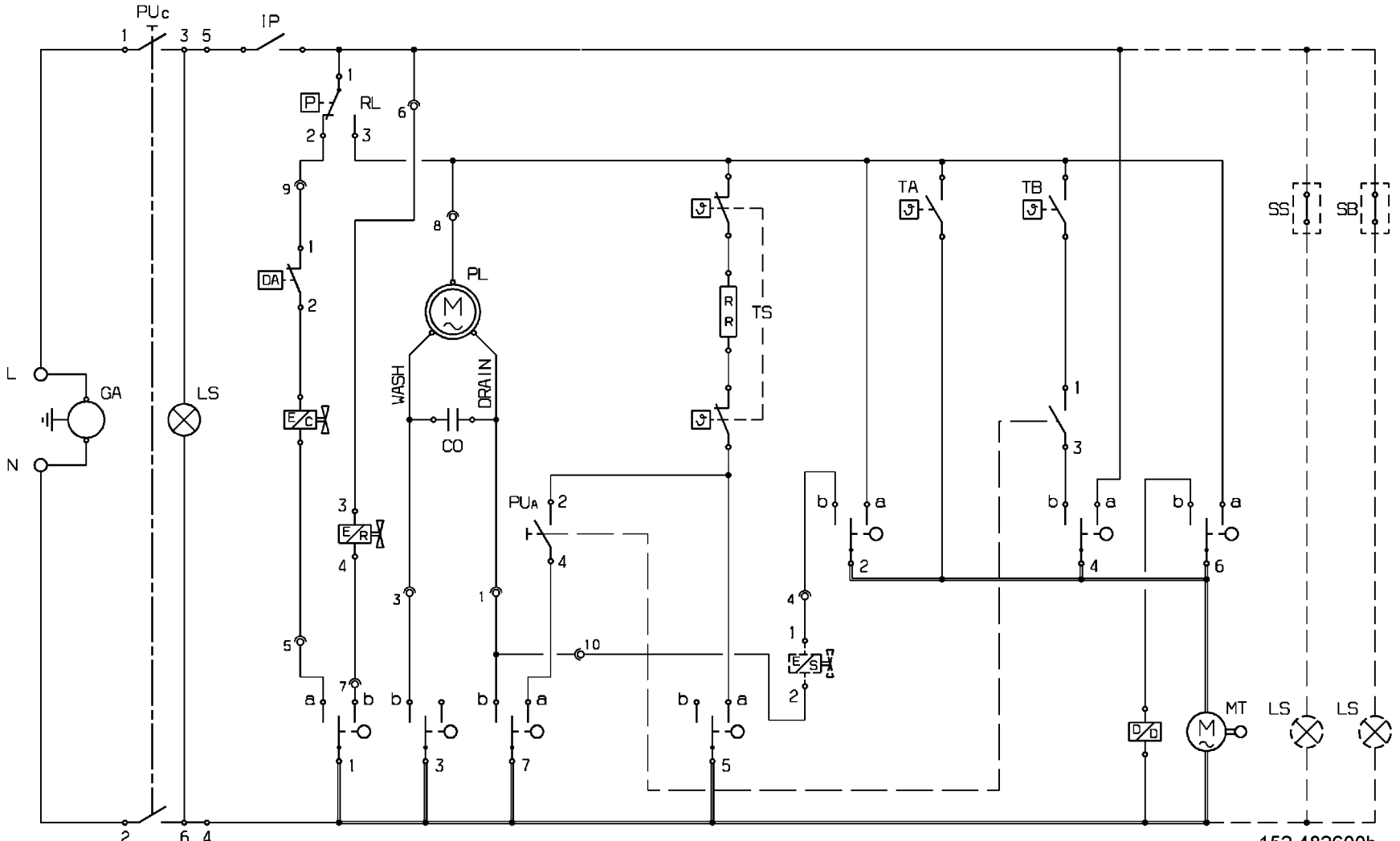
PUc
IP
RL
P
DA
E/C
E/R
PL
M
WASH
DRAIN
CO
L
N
GA
LS
TS
R
R
PUA
E/S
TA
TB
SS
SB
D/D
MT
LS
LS
1
2
3
4
5
6
7
8
9
10
a
b

152 482600b