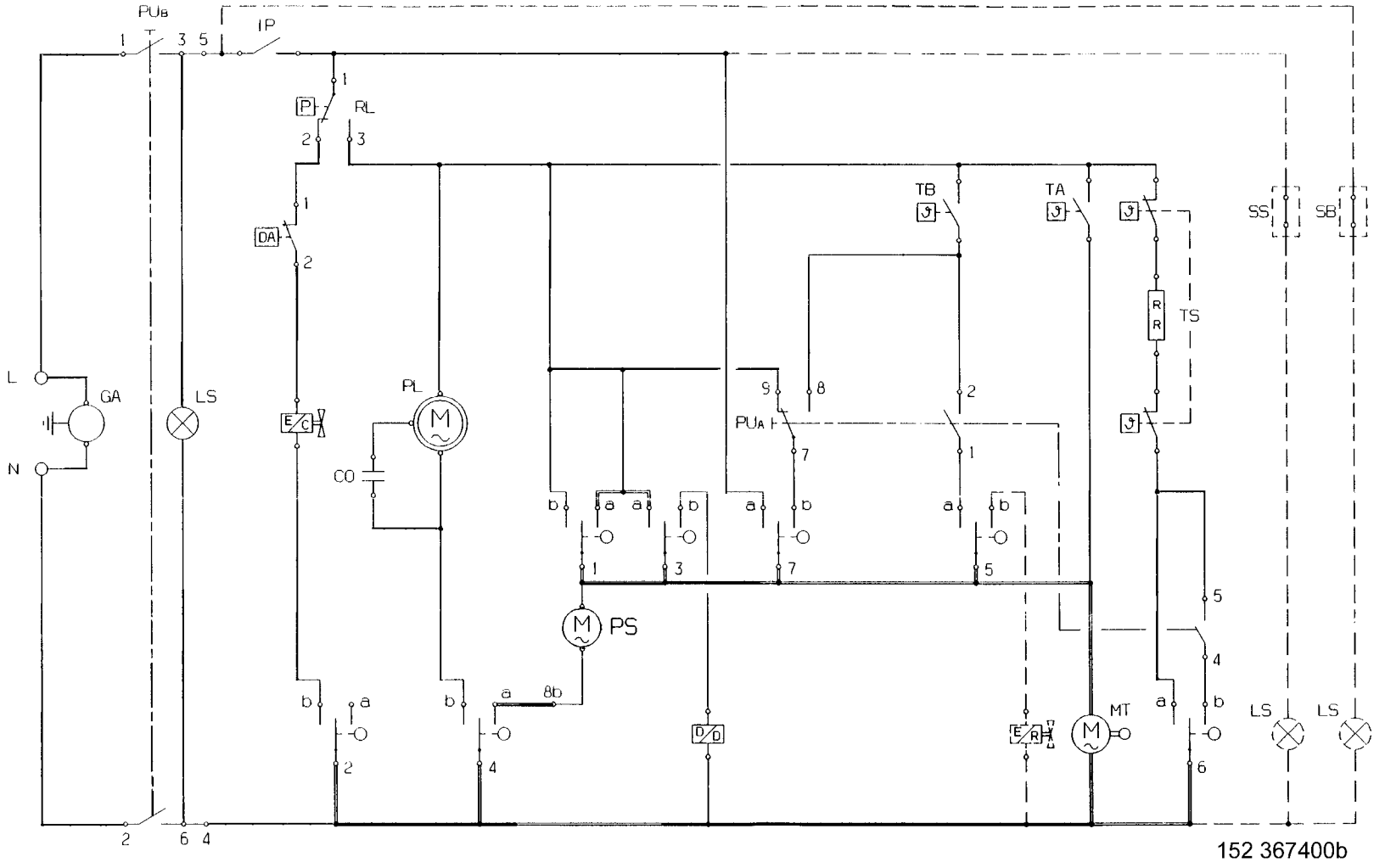
PUB
IP
P
RL
DA
E/C
L
N
GA
LS
PL
M
CO
PS
8b
D/D
PUA
TB
TA
TS
R
SS
SB
E/R
MT
LS
LS

152 367400b