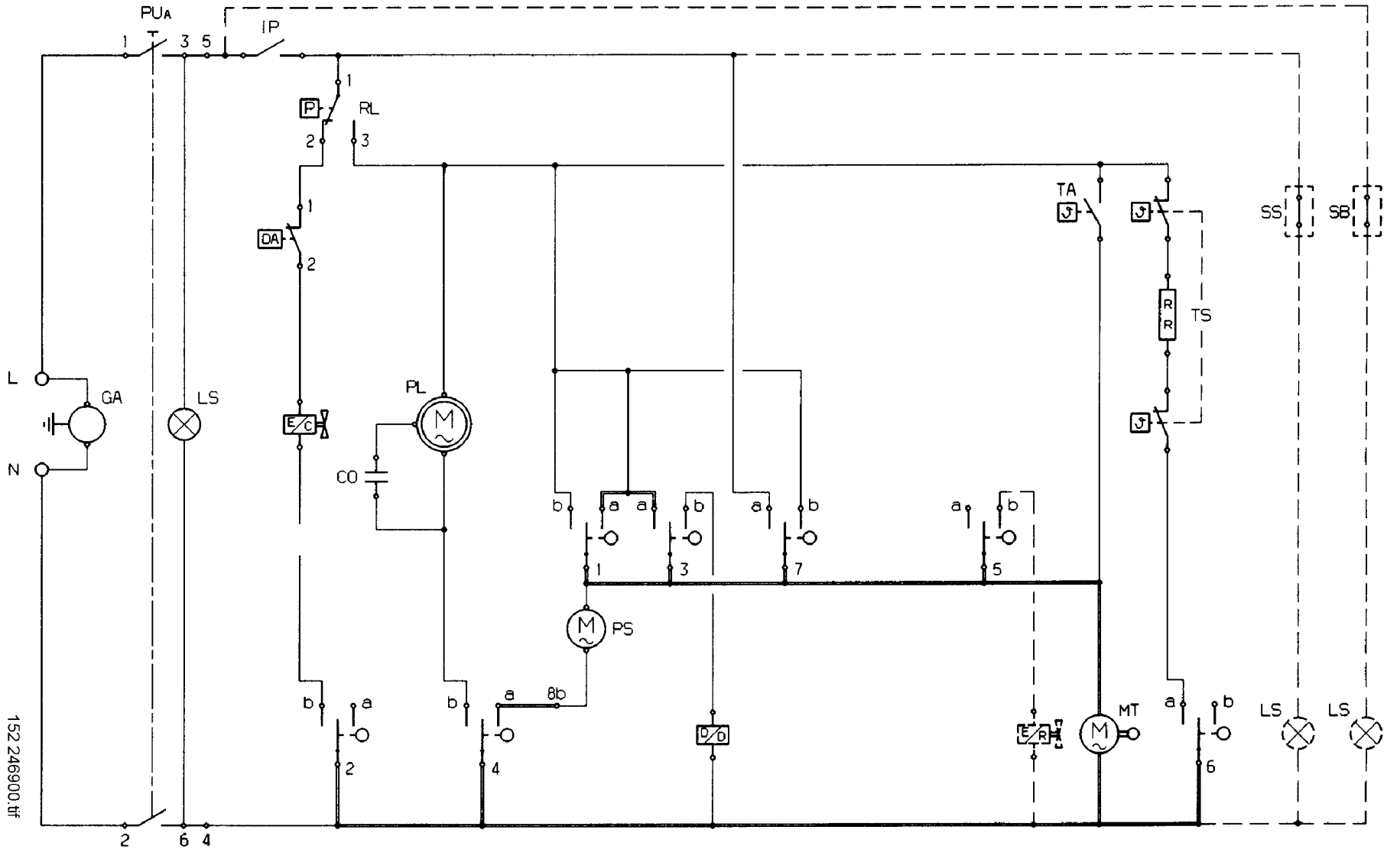
PUA
IP
RL
DA
GA
LS
PL
CO
PS
TA
TS
SS
SB
MT
L
N
152 246900.tif