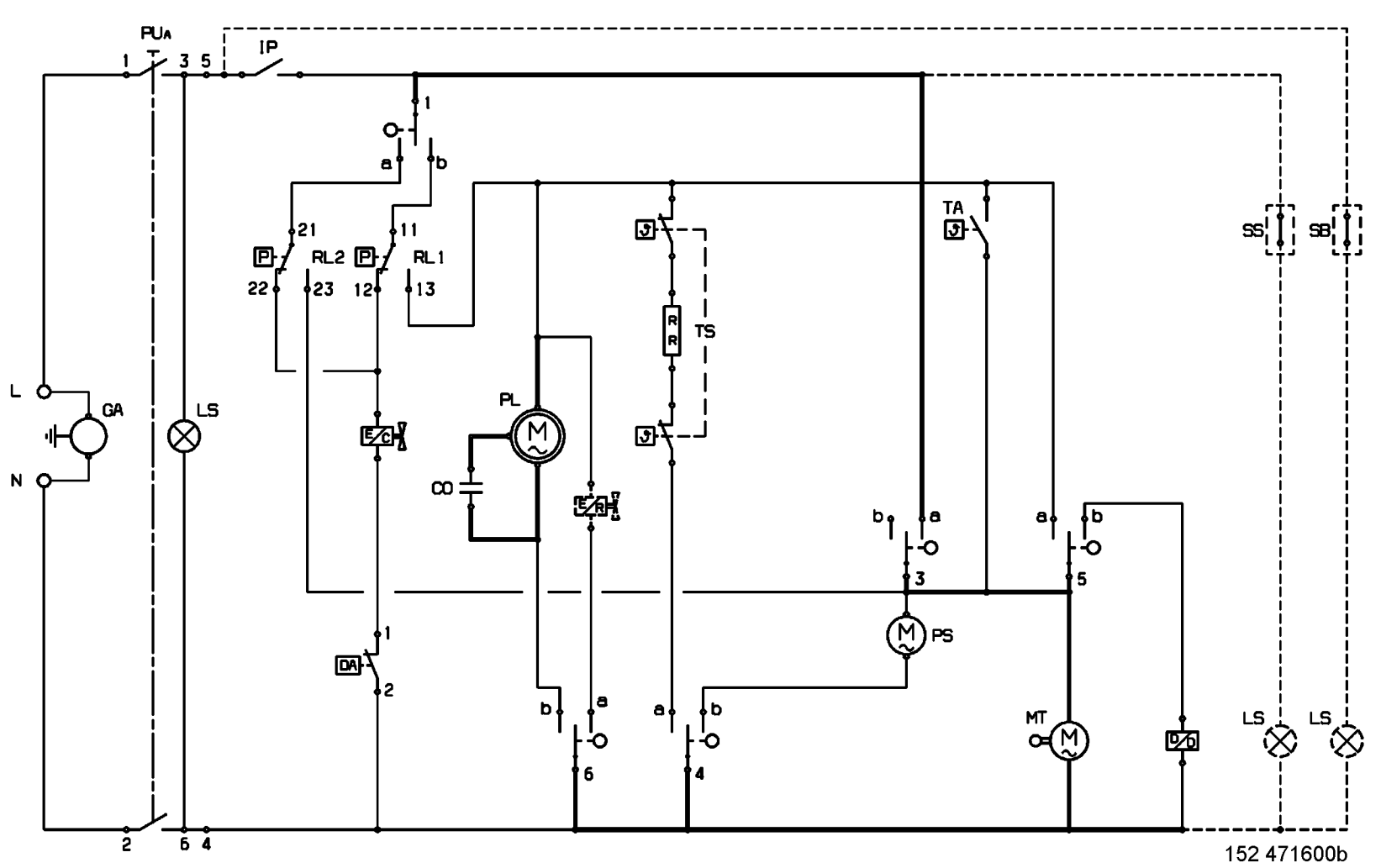
PUA
IP
1
3
5
2
6
4
L
N
GA
LS
RL2
RL1
21
22
23
11
12
13
a
b
PL
CO
TS
TA
SS
SB
PS
MT
DA
6
4
3
5
LS
LS

152 471600b