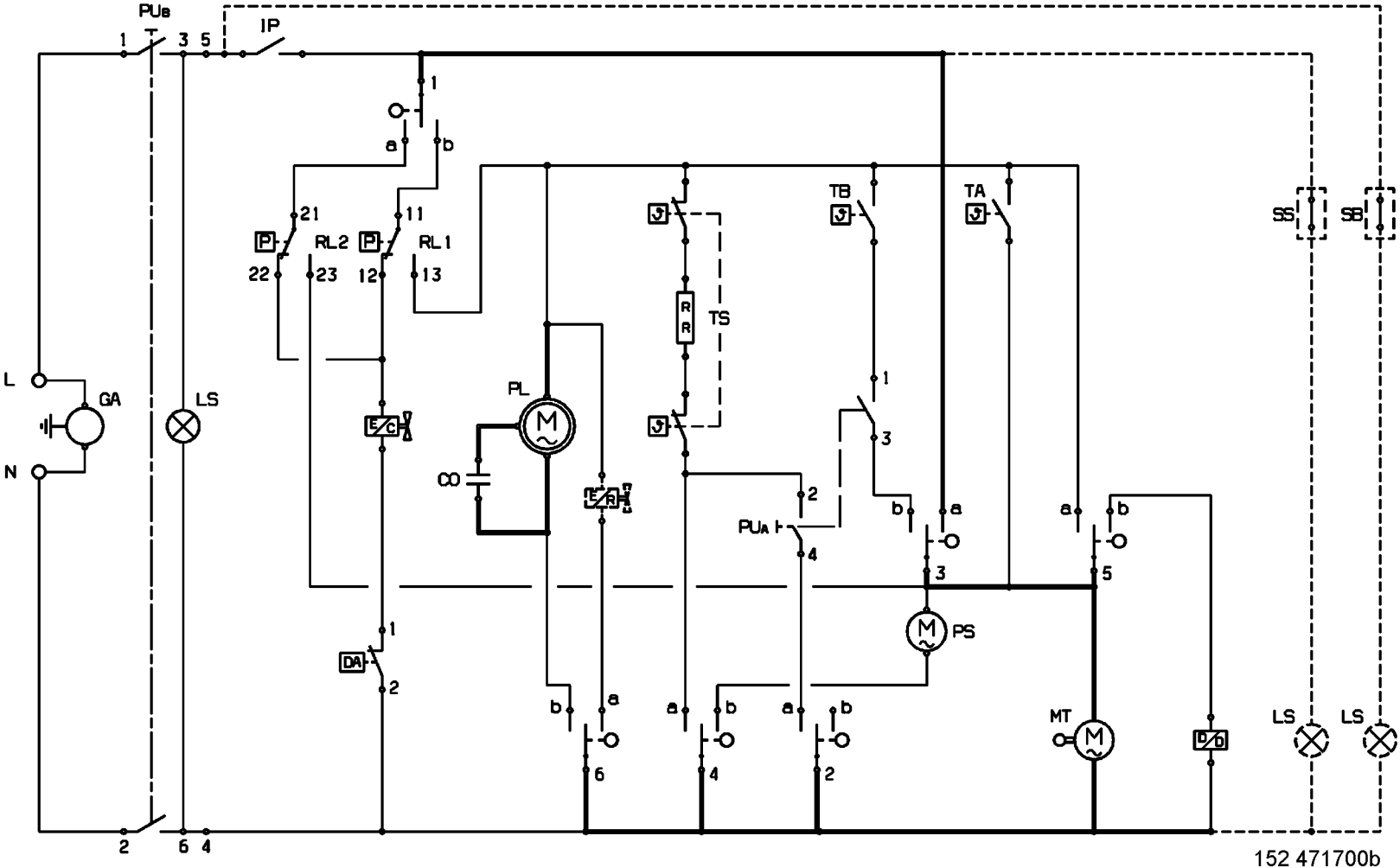
PUB
IP
RL2
RL1
TS
TB
TA
SS
SB
L
N
GA
LS
PL
CO
PUA
PS
MT
DA
152 471700b