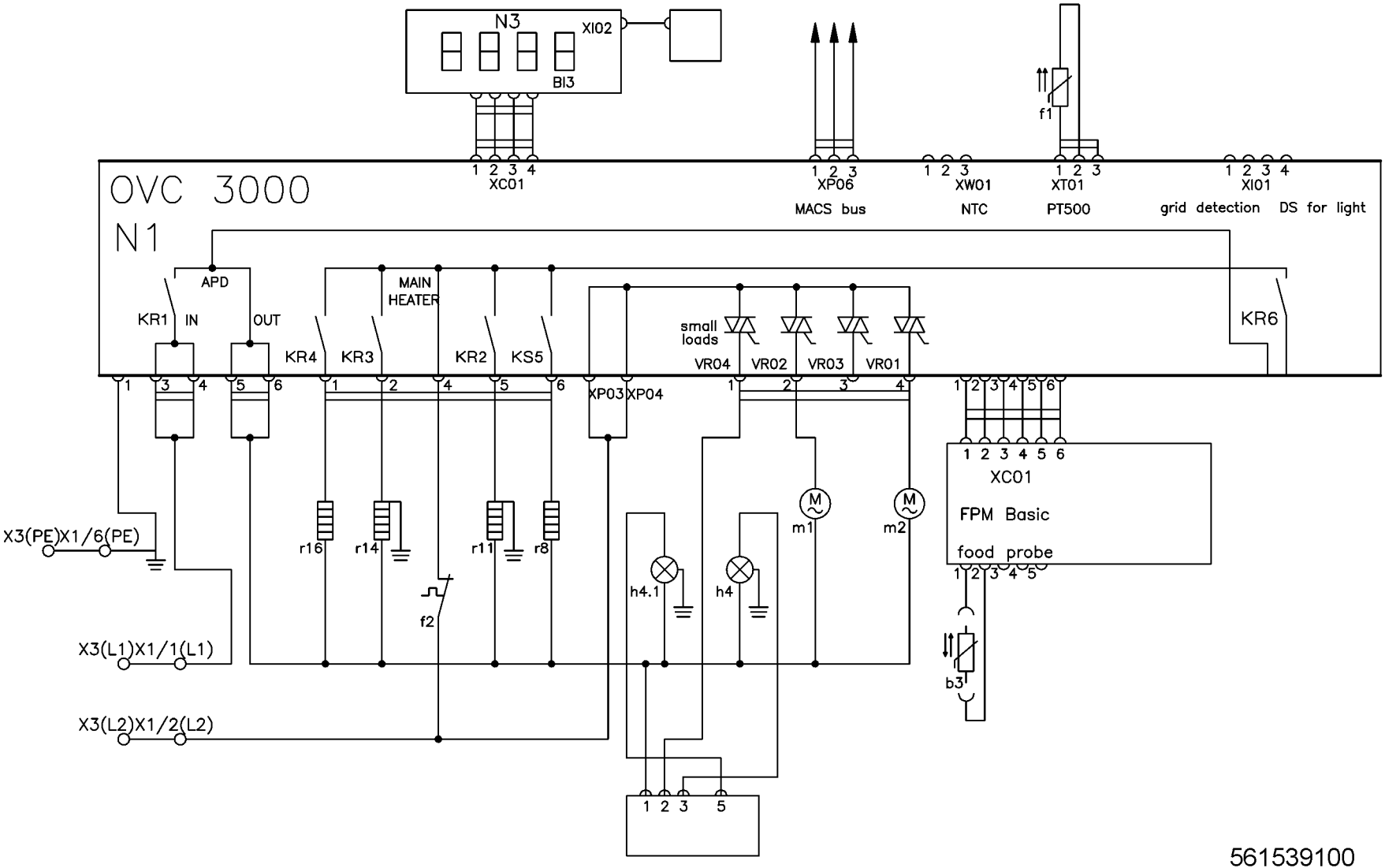
N3
XI02
BI3
XC01
XP06
MACS bus
XW01
NTC
f1
XT01
PT500
XI01
grid detection
DS for light
OVC 3000
N1
APD
KR1
IN
OUT
KR4
KR3
MAIN HEATER
KR2
KS5
small loads
VR04
VR02
VR03
VR01
KR6
XP03
XP04
XC01
FPM Basic
food probe
b3
m1
m2
h4.1
h4
r16
r14
r11
r8
f2
X3(PE)X1/6(PE)
X3(L1)X1/1(L1)
X3(L2)X1/2(L2)

561539100