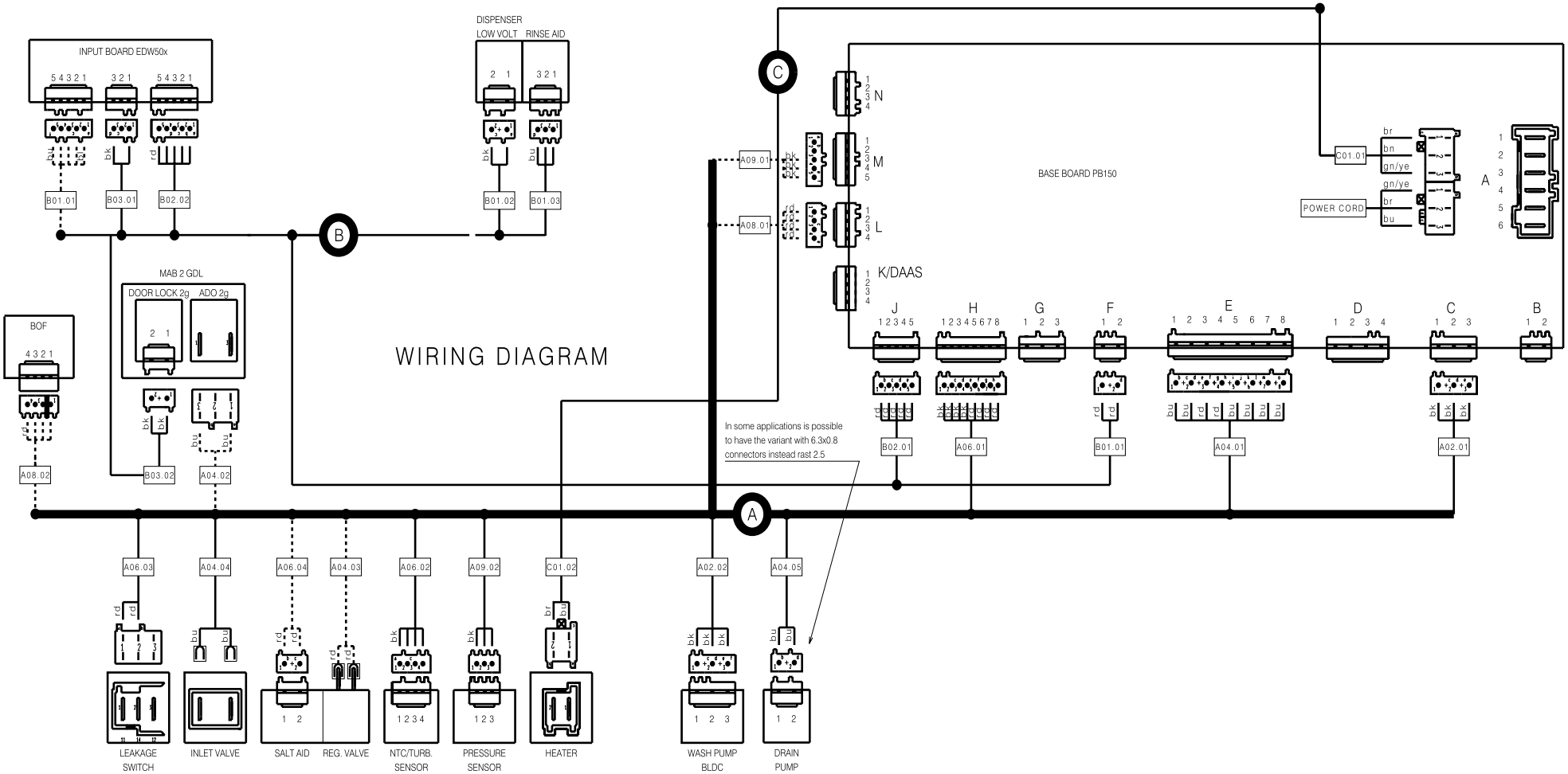

P0000300002809

A06049808