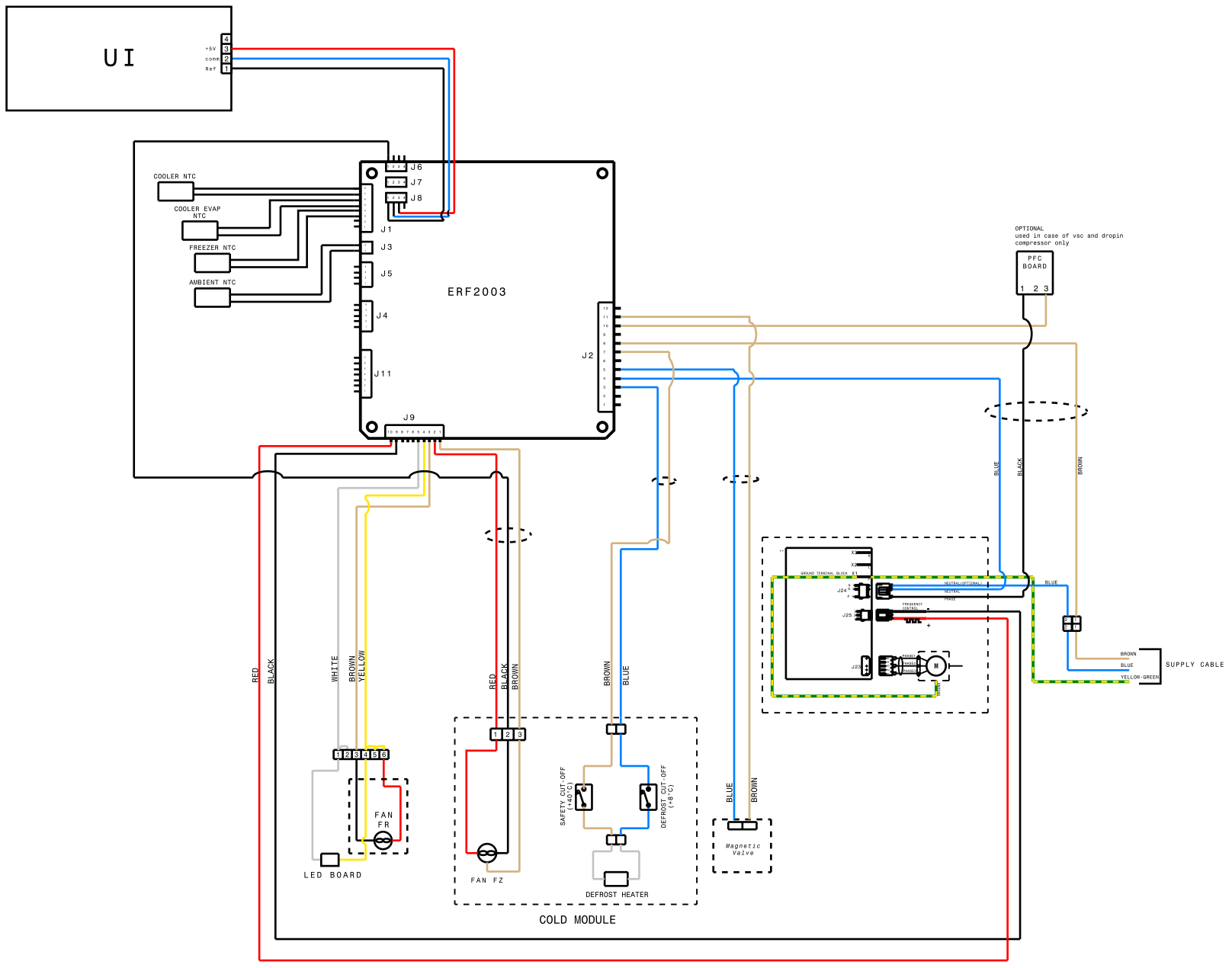

P0000300002781
A13769719