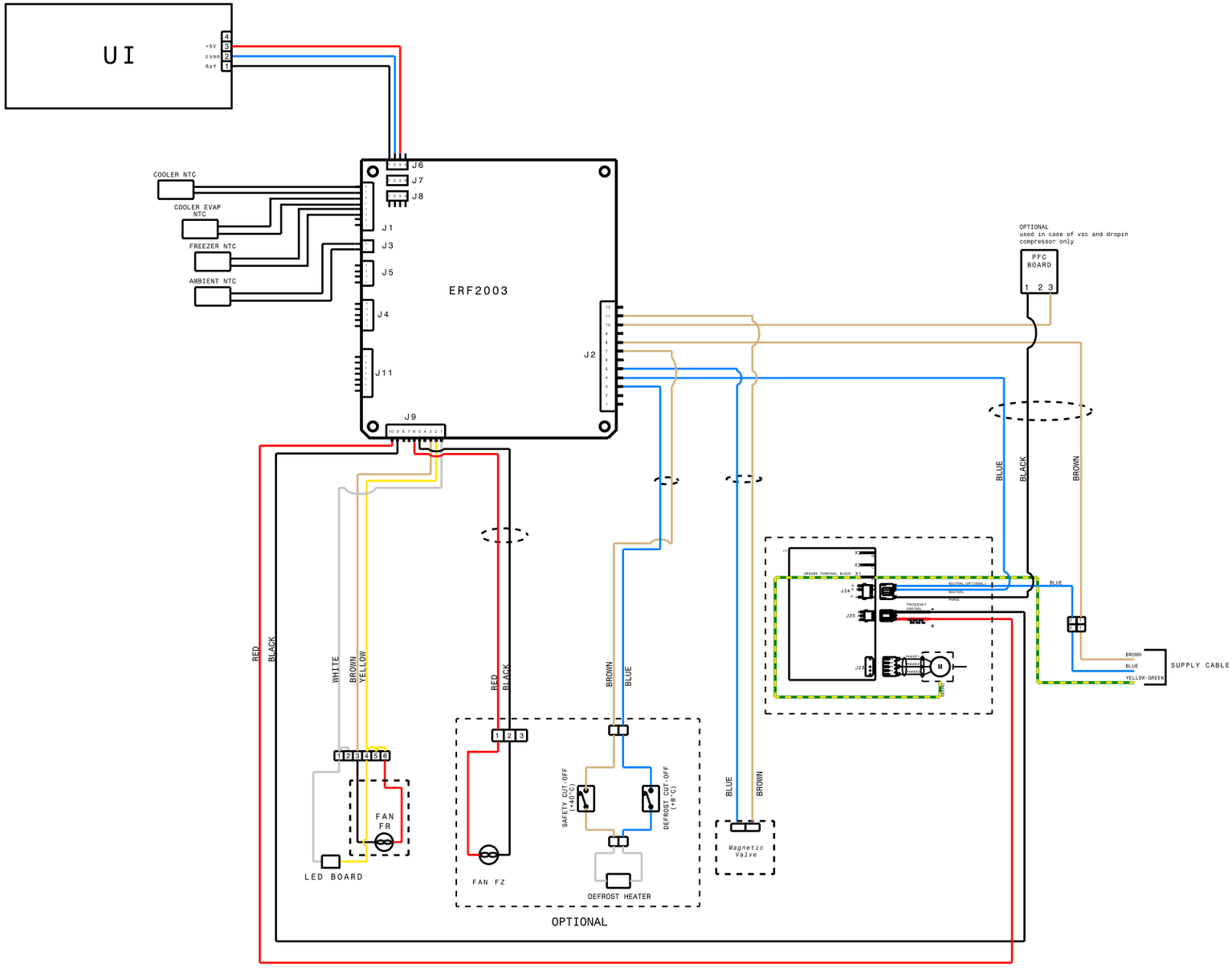

A13769717
P0000300002774