A11979123_C
P0000300002761
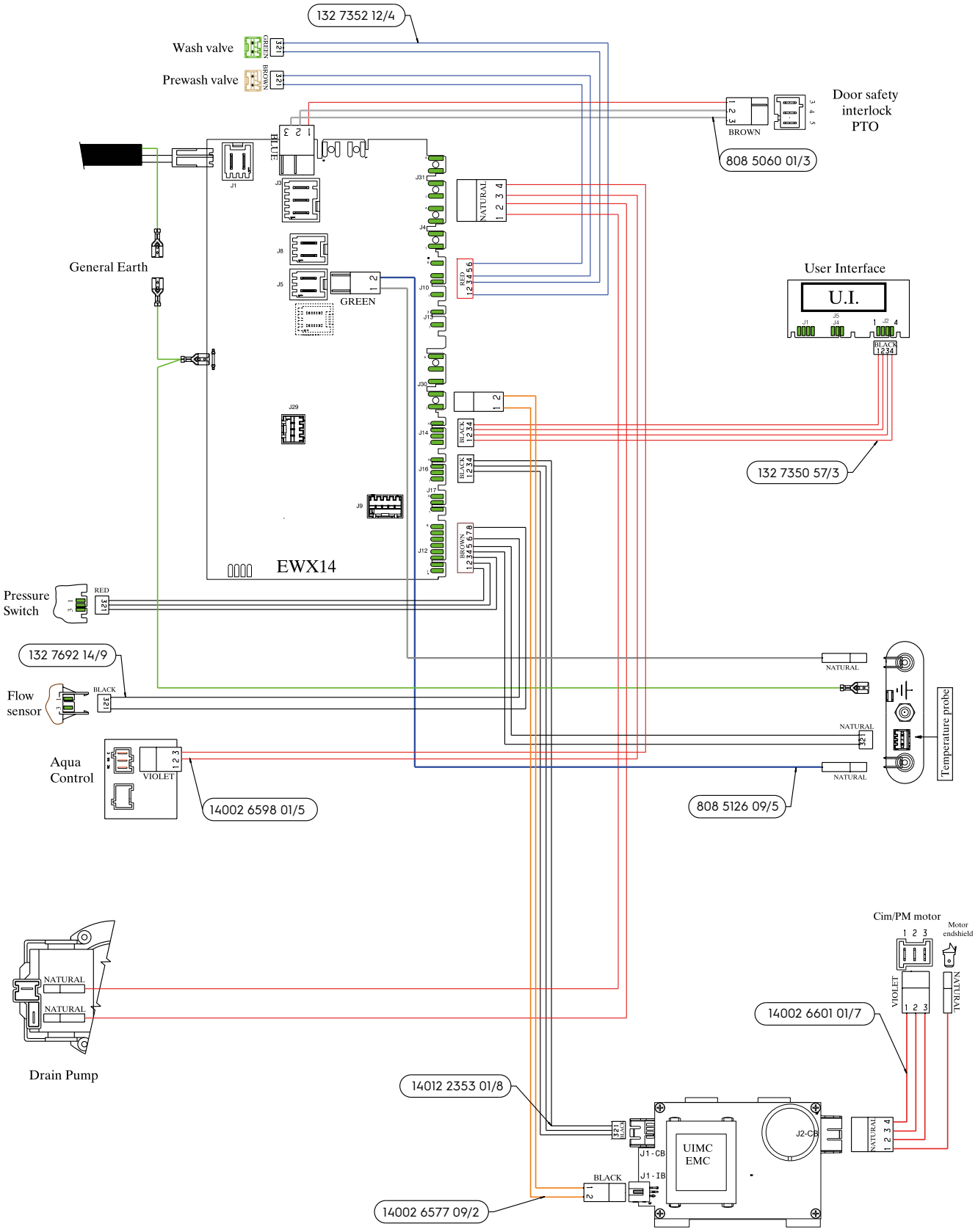
WIRING HARNESSES