WIRING HARNESSES
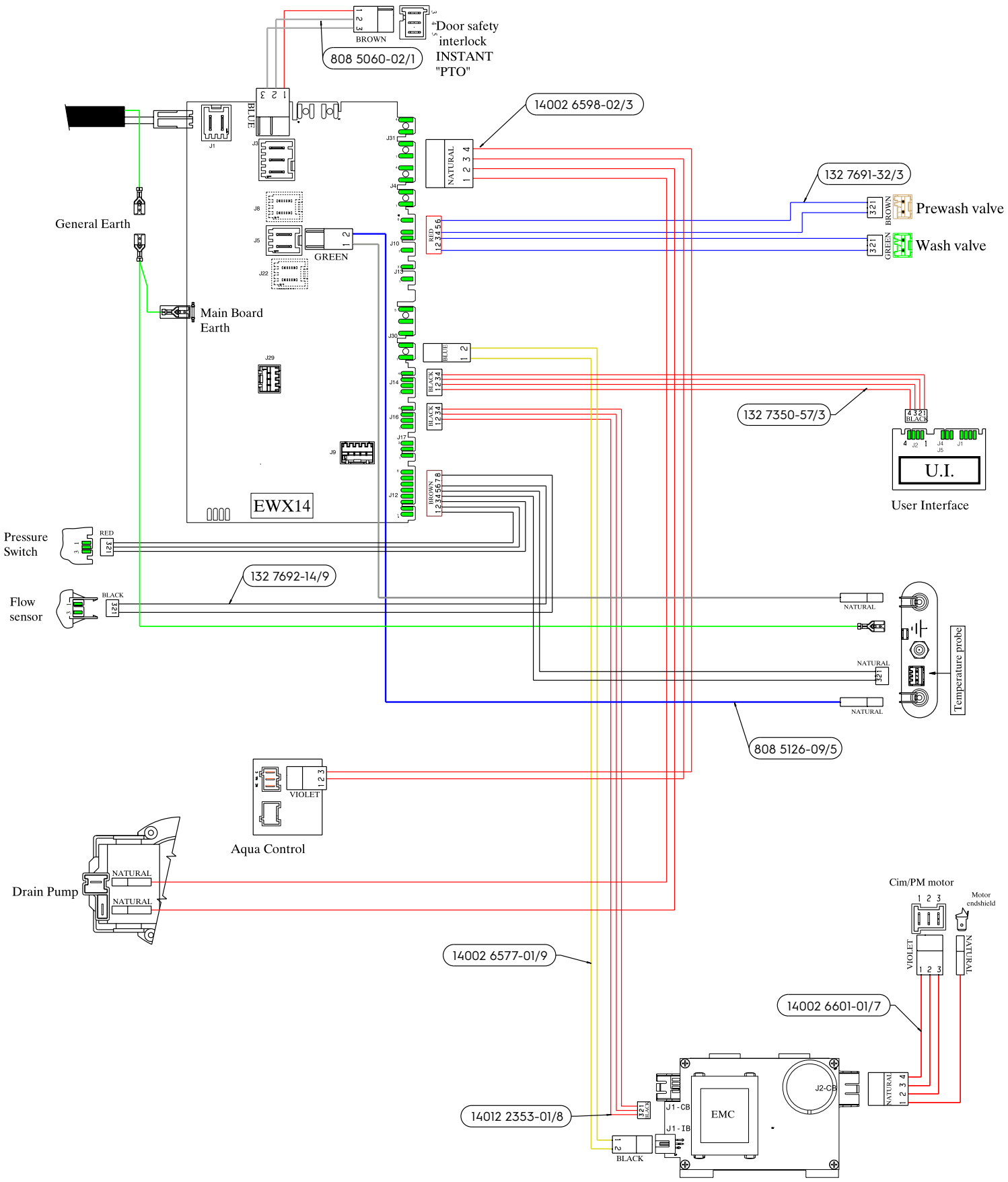
A02890627_B
P0000300002743