WIRING HARNESSES
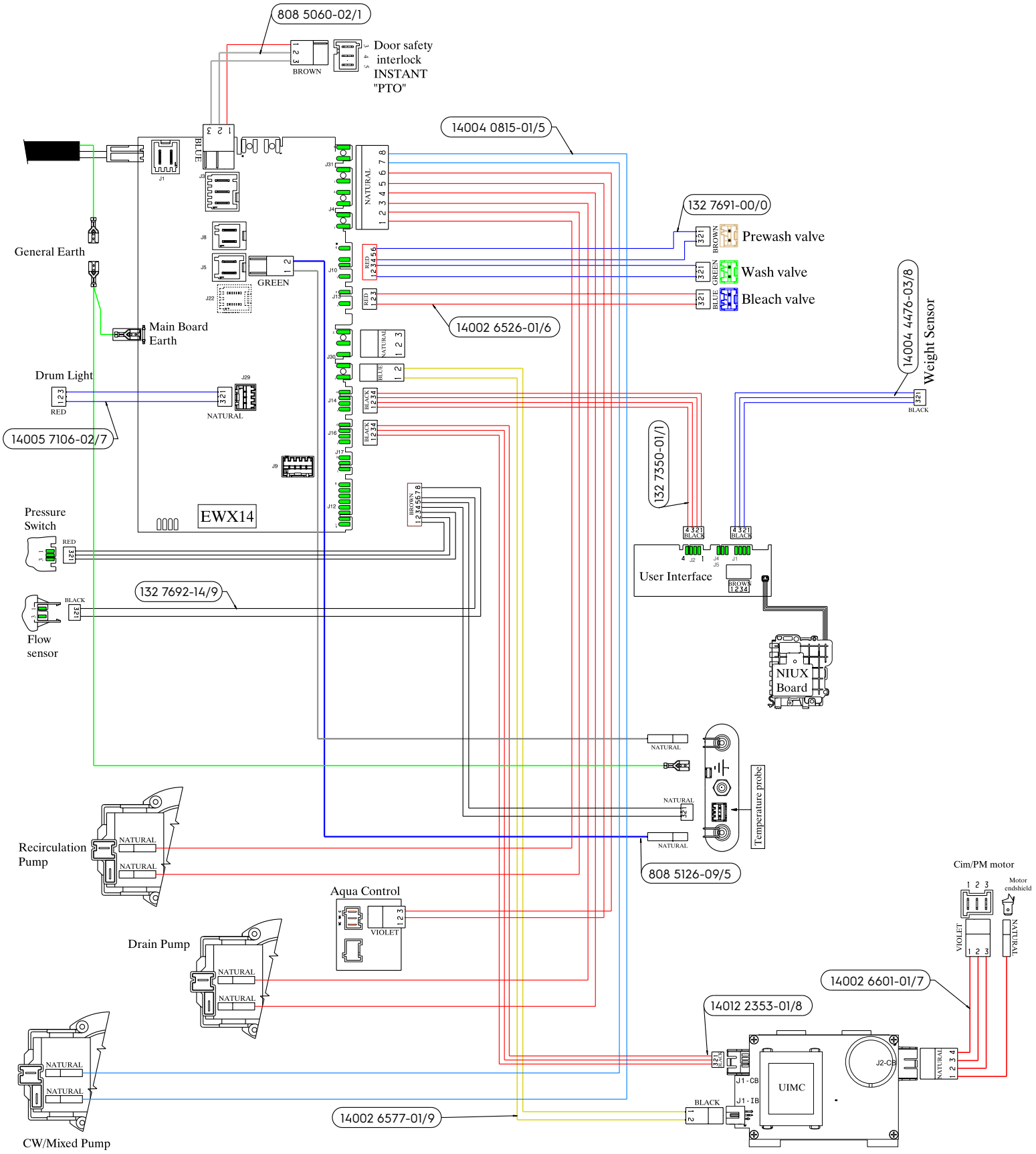
A01539372_B
P0000300002705