A05241931_C
P0000300002536

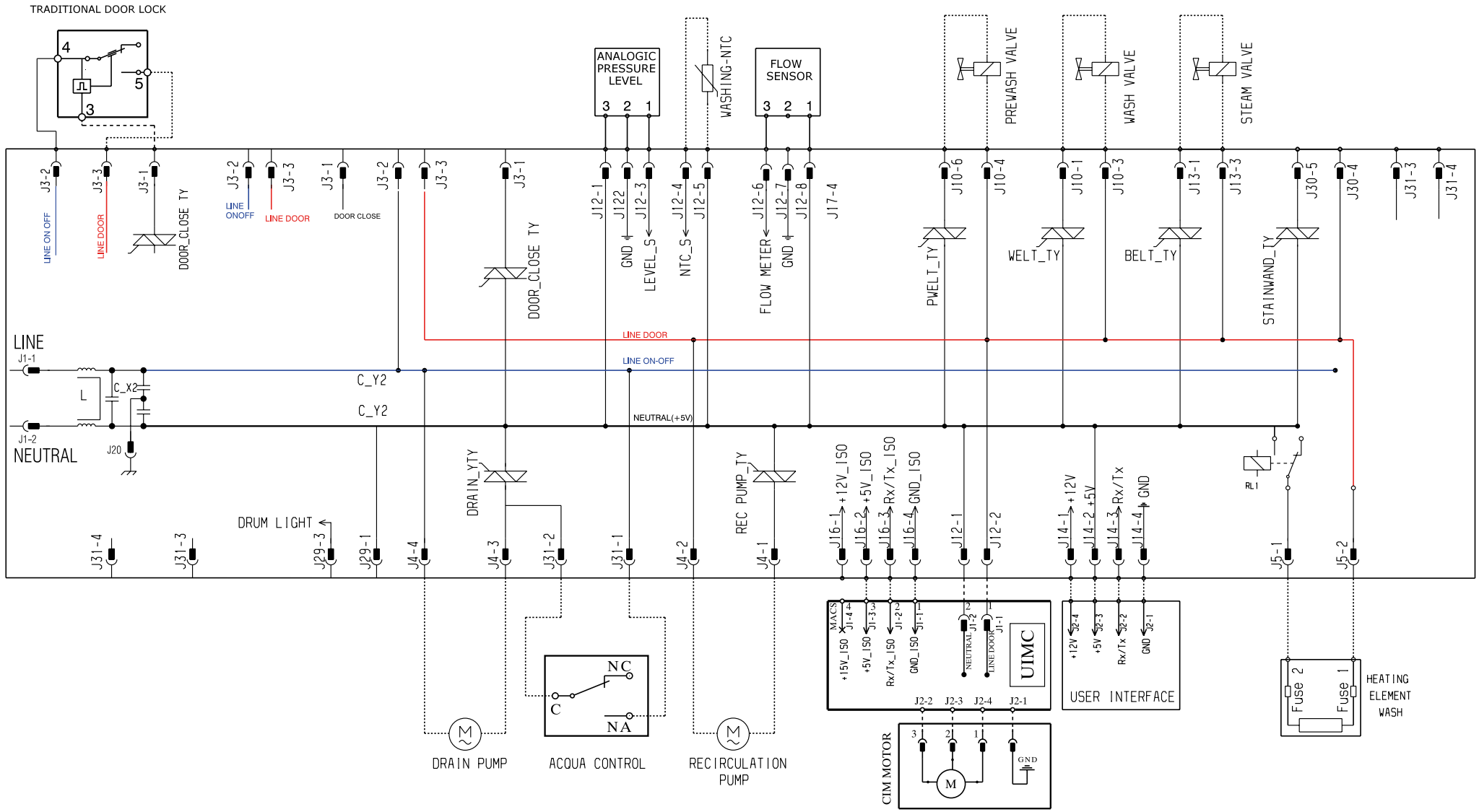

ELECTRIC DIAGRAM EWX14