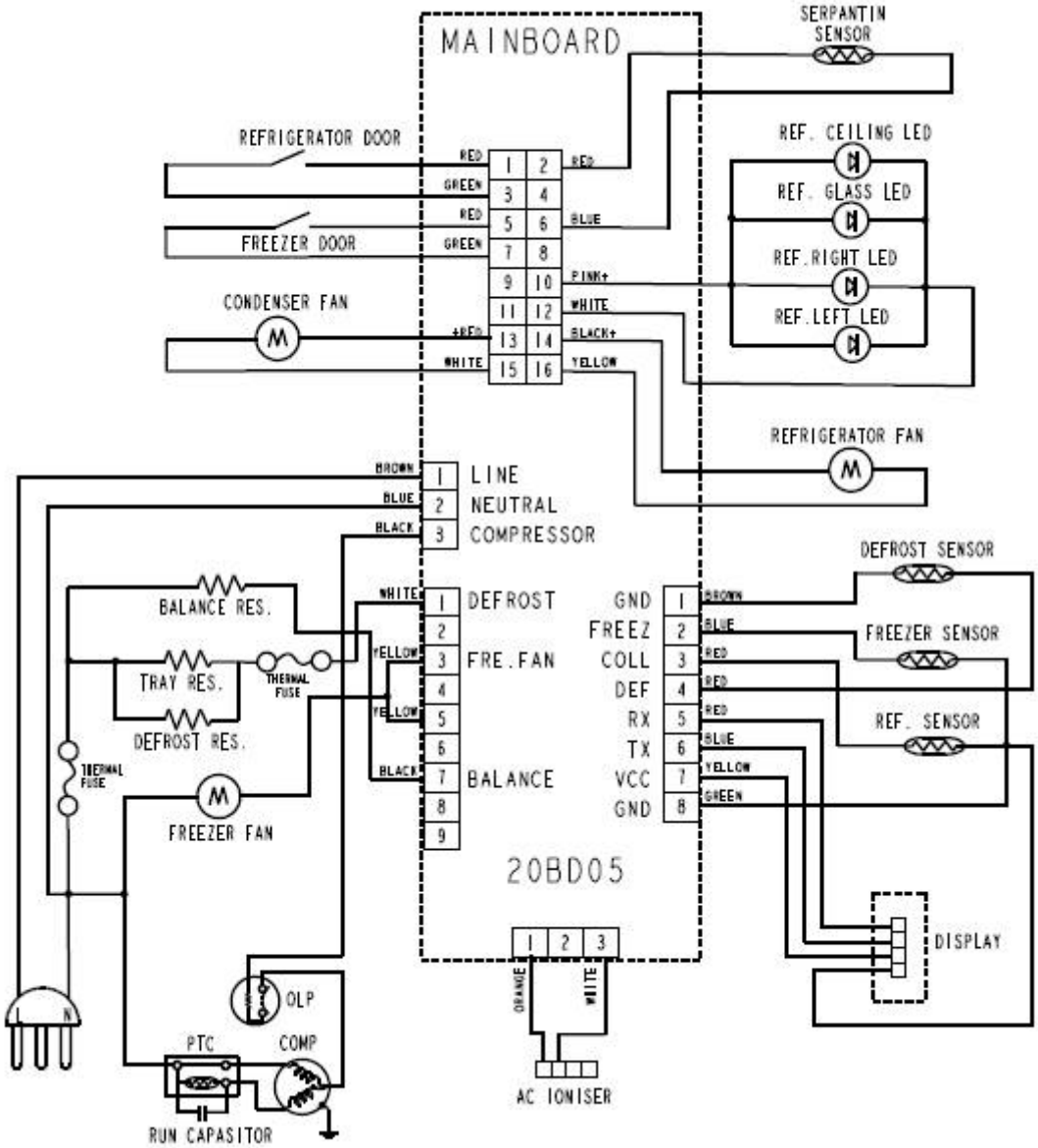

P0000300002512