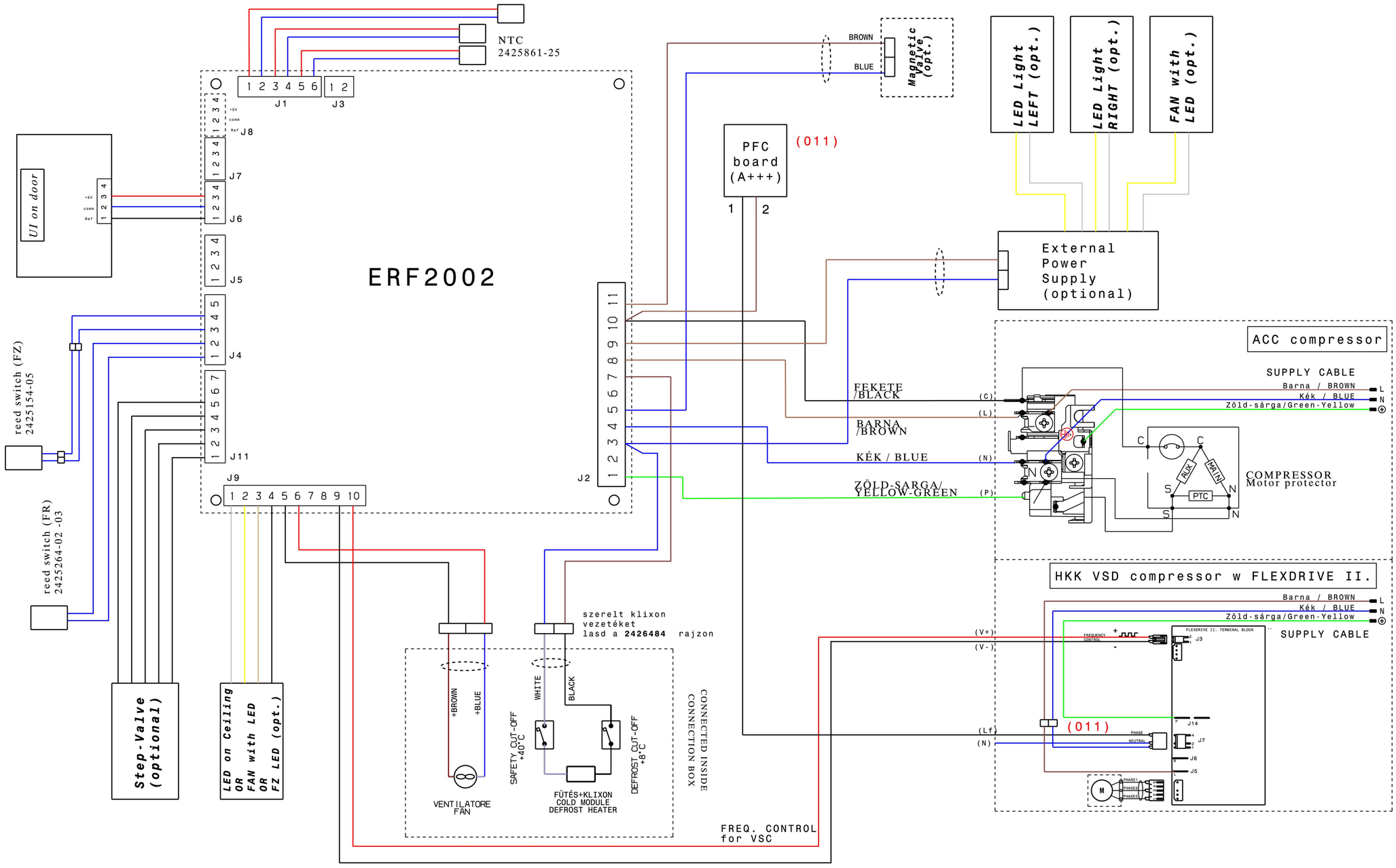

808134464

P0000300002450