A01539362_B
P0000300002349
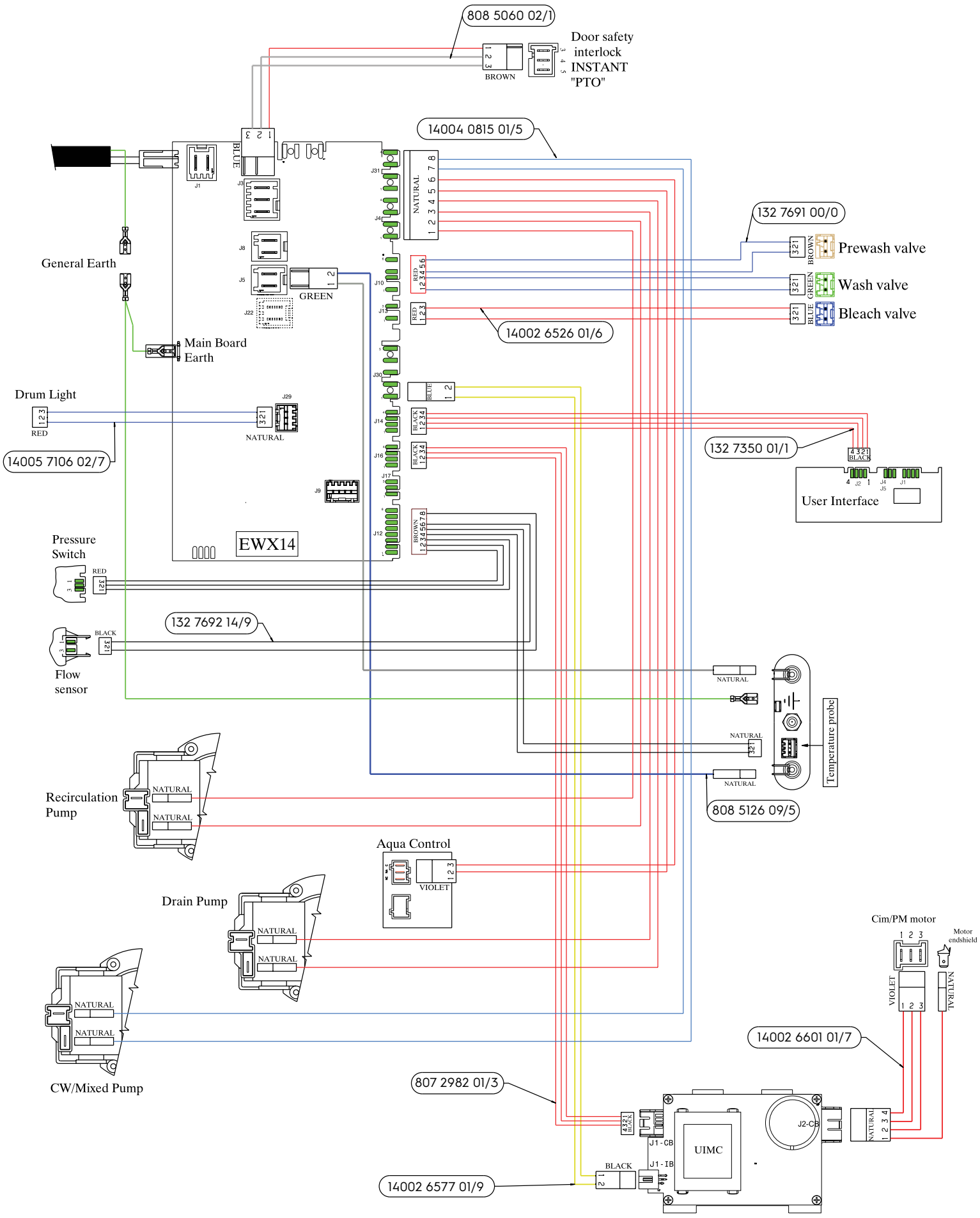
WIRING HARNESSES